NO. 51 NOTES FROM THE SHOP $2.50

Woodsmith®

- BAND SAWN BOXES
- TABLE SAW / RADIAL ARM SAW TUNE-UP
- BAND SAW BASICS • SIMPLE CIRCLE CUTTING JIG

Classic Roadster

Woodsmith

Number 51 June, 1987

Editor
Donald B. Peschke

Design Director
Ted Kralicek

Assistant Editors
Steve Krohmer
Douglas L. Hicks
Douglas M. Lidster

Designer
Ken Munkel

Technical Illustrators
David Kreyling
Mike Henry

Subscription Manager
Sandy J. Baum

Subscription Assistants
Christel Miner
Vicky Robinson
Jackie Stroud
Pat Koob

Computer Operations
Ken Miner

Administrative Assistants
Cheryl Scott
Kate Bauma

Builiding Maintenance
Archie Krause

WOODSMITH (ISSN 0164-4114) is published bimonthly (February, April, June, August, October, December) by Woodsmith Publishing Co., 2200 Grand Ave., Des Moines, Iowa 50312.
WOODSMITH is a registered trademark of the Woodsmith Publishing Co.
©**Copyright 1987** by Woodsmith Publishing Co. All Rights Reserved.
Subscriptions: One year (6 issues) $10, Two years (12 issues) $18. Single copy price, $2.50 (Canada and Foreign: add $2 per year.)
Change Of Address: Please be sure to include both your old and new address.
Second class postage paid at Des Moines, Iowa.
Postmaster: Send change of address notice, Form 3579, to Woodsmith Publishing Co., 2200 Grand Ave., Des Moines, Iowa 50312.

BACK ISSUES

All back issues of *Woodsmith* are still available. Send for a free booklet describing the contents and prices of all back issues.

SAMPLE COPIES

If you have a friend who would like to see a copy of **Woodsmith**, just send the name and address, and we'll send a sample (at no cost).

Sawdust

ABOUT THIS ISSUE. The vast majority of projects shown in *Woodsmith* can be built with a table saw, router, drill press and hand tools. That's kind of unusual when you think about it. Looking back on the past 50 issues, there has been an incredible variety of projects built with this "limited" selection of tools.

But there's one tool that we don't feature too often, and it's one of my favorites: the band saw. Although I wouldn't give up my table saw, a band saw offers some unique opportunities to have some real fun with woodworking.

The projects in this issue are designed around a band saw as the primary piece of equipment. (Although it is handy to have a table saw to do some of the preliminary work needed to square up the block before you begin work on the band saw).

So, that means the projects have a lot of curved cuts, right? I suppose that band saws are best known for cutting curves. But they can do a whole lot more. They also excel at resawing (ripping wood on edge to get thinner pieces).

If for no other reason, I would seriously consider buying a band saw just to resaw stock. There's just no comparison between resawing on a band saw and on a table saw. It's a rather harrowing experience on a table saw, but easy and almost comfortable on a band saw.

Yet, while singing the praises of a band saw, they do have their awkward side. There are times when cutting a straight line is more of a challenge than it should be. If the saw isn't set up properly, you will get a wandering cut.

TUNE UP. The solution, of course, is easy. Tune up your saw before you begin the project. But that's easier said than done. I'm usually anxious to get going, and I wind up cutting when I should be tuning.

The importance of tuning up a band saw is far more important than most other machinery. It's a task that has to be done on a regular basis — at the least, every time the blade is changed.

A couple of years ago, I watched Mark Duginske set up a band saw. Mark is a cabinetmaker from Wisconsin who demonstrates Inca machinery at a variety of woodworking shows and stores (when he's not at home working on his new book on band saws).

Mark was preparing for a woodworking show and was using his own band saw — one that I'm sure has received much attention and care. Yet, before the show, Mark spent a good deal of time making adjustments and setting up the saw before he ever cut into a piece of wood.

It was interesting to watch the attention to detail that went into this preparation. And equally interesting to see the results. Mark pushed the saw to it's limits, and it never complained.

We've tried to offer a description of this procedure in this issue. The steps we follow to tune up our band saw don't take long, but they do yield big results.

CAR KIT. Once the saw is tuned up, the fun begins. For me, that was building the classic roadster for this issue.

Although I enjoyed building this car, the time-consuming part was collecting all the parts and wood needed before I could even begin. That meant several different sources for this project.

Over the past few years, we've tried to list all the sources we used for the projects shown in each issue. But starting with this issue, and in particular with the classic roadster, we are adding another source: *Woodsmith* Project Supplies.

If you want to order the parts and wood needed to build the roadster, we are offering a kit. Actually two kits, one with parts (wheels, springs and the plastic for the windscreen), and another kit that includes those parts plus the wood and dowels needed.

We're not trying to compete with the mail-order catalogs. In fact, if you want to make a lot of cars, their prices will be much better than ours. What we wanted to do is offer a service — a way to reduce the hassles of getting the supplies needed for a project shown in *Woodsmith*.

We thought about offering this service to subscribers several times in the past. There always seems to be one little part that's sort of obscure, or that's so inexpensive that you can't meet the minimum order the catalogs usually require, or that's just not available through the mail.

In fact, what got us going this time was a little piece of plastic. To make the windscreen, you need a piece of plastic. Not a big deal. Until you try to find a small piece.

At first, we thought about taking the plastic windscreen off the car just to make it easier. But it was too nice with it. Then we thought about sending out just the piece of plastic to anyone who wanted it.

One thing led to another and we decided that the best approach was to offer two kits of parts for the car.

So we'll see how it works. If it seems to be popular, we'll expand it to include other projects, both in the future and for past issues.

NEXT MAILING. The next issue of *Woodsmith* (No. 52) will be mailed during the first week in October.

Tips & Techniques

MACHINIST'S VISE HOLD-DOWN

I wanted to build the traditional woodworker's bench shown in *Woodsmith* No. 50, but I was reluctant to give up my heavy cast iron machinist's vise. I still use the vise to work on metal parts and to make repairs on household items.

Rather than bolt the machinist's vise permanently to the top of my new bench, I attached it to a ¾" plywood base plate that had a 2x4 "keel" screwed to the bottom. The keel could then be tightened into the front vise on the bench when I needed the machinist's vise and removed for storage when I didn't need it.

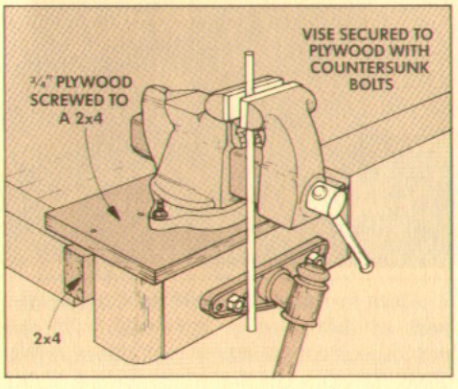

Bolt the machinist's vise to the plywood base with flathead machine bolts so the stationary back jaw of the vise sticks out slightly beyond the front edge of the plywood. If the stationary jaw doesn't clear the plywood, you won't be able to clamp long stock into the vise vertically.

Wyn Hoop
Marietta, Georgia

CREDIT CARD PUTTY KNIFE

On my last project, I found it necessary to use wood filler in some awkward spots. A putty knife just wouldn't do it, so I came upon the idea of using an old credit card.

It has two widths for various size patch-ups, is flexible, will not mar most woods, does not rust, and cleans up easily. It's also readily available and (theoretically) costs nothing.

For best results, hold it like a rectangular scraper and pull it across the filler in the direction of the grain.

Tony Gulotta
Woodhaven, New Jersey

PREVENTING ROUTER FALLOUT

Adjusting the height of my new Sears router on my *Woodsmith* router table used to be a problem. When I loosened the thumb screw on the router to raise or lower the bit, the motor would fall completely out of the router base.

(Editor's Note: This is a problem with many other brands of routers, too. However, older model Sears routers had a rack and pinion system that kept the motor from falling completely out.)

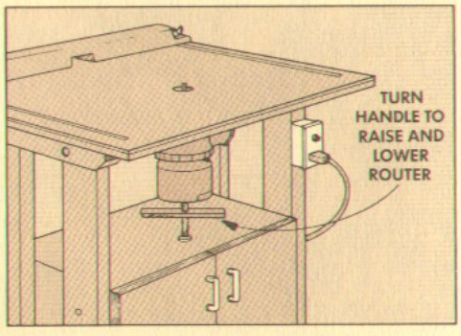

To solve the problem I built a height adjuster to support and raise and lower the router. Since I built the router table with legs and storage cabinet underneath, I had a sturdy shelf about 3" below the bottom of the router to anchor the adjuster.

Start by drilling a hole in the cabinet directly under the center of the router to accept a ⅜" T-nut. Next, cut a shaft from ⅜" threaded rod to rotate in the T-nut.

I added a handle (made from ¼" Masonite) to the rod and held it in place between two nuts, see drawing. Finally I tightened a couple more nuts against each other on the top of the rod as a pad for the router motor to sit on. (Note: You could make a larger pad for the motor, but don't restrict the air flow through any ventilation holes.)

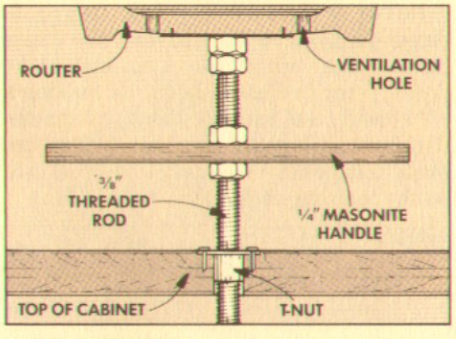

To use the height adjuster, turn the rod until the top nut touches the router. Then loosen the router thumb screw, turn the handle (and rod) until the desired bit height is reached, and retighten the thumb screw. Since ⅜" x 16 threaded rod has 16 threads per inch, one full turn of the handle equals a 1/16" rise in the bit.

Jerry Poore
Noblesville, Indiana

A SLIGHTLY WIDER KERF

It's always a tight fit when I try to push a ⅛" Masonite spline into a kerf made by my carbide sawblade. The kerf is just a hair less than ⅛", and the Masonite with the glue on it is a hair more than ⅛".

One solution is to move the fence over a whisker and make another cut, but sometimes the distance from the fence to the kerf is critical and you want to be able to make the groove in one pass. Instead, I took an idea from an adjustable dado and *slightly* angled the blade.

To angle the blade, put a couple small pieces of masking tape on the inside face of the blade washer and the inside face of the arbor flange. Now replace the blade, washer, and nut on the arbor making sure that the washer is positioned so the tape on the washer is 180° from the tape on the flange. (As shown on the drawing, the tape on the washer is on the top and the tape on the flange is on the bottom.)

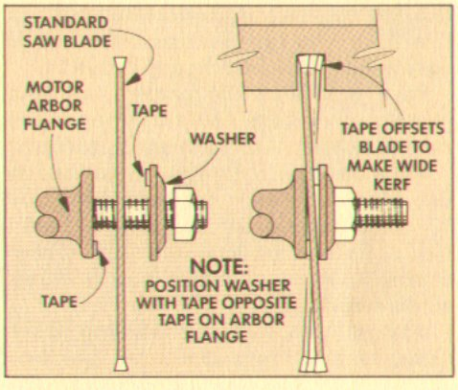

Once the saw is turned on, the angled blade cuts a slightly wider kerf through the wood. There's some trial and error involved. I discovered that three thicknesses of masking tape opened up the kerf about 1/32" — just about right to accept the ⅛" Masonite. I wouldn't try to build up too many layers since standard saw blades aren't made to rotate on a severely angled track.

William R. Swartz
Modesto, California

SEND IN YOUR IDEAS

If you'd like to share a woodworking tip with other readers of *Woodsmith*, send your idea to: *Woodsmith*, Tips & Techniques, 2200 Grand Ave., Des Moines, Iowa 50312.

We pay a minimum of $10 for tips, and $15 or more for special techniques (that are accepted for publication). Please give a complete explanation of your idea. If a sketch is needed, send it along; we'll draw a new one.

Classic Roadster

A CAR YOU AUTO BUILD

It may be a while before I have the chance to drive a classic roadster. But for now, I'm content with the one sitting on my desk. It's as close to a replica of a golden age automobile as we could get — at least one made entirely of wood. And it's a testimony to the joys of working with a band saw.

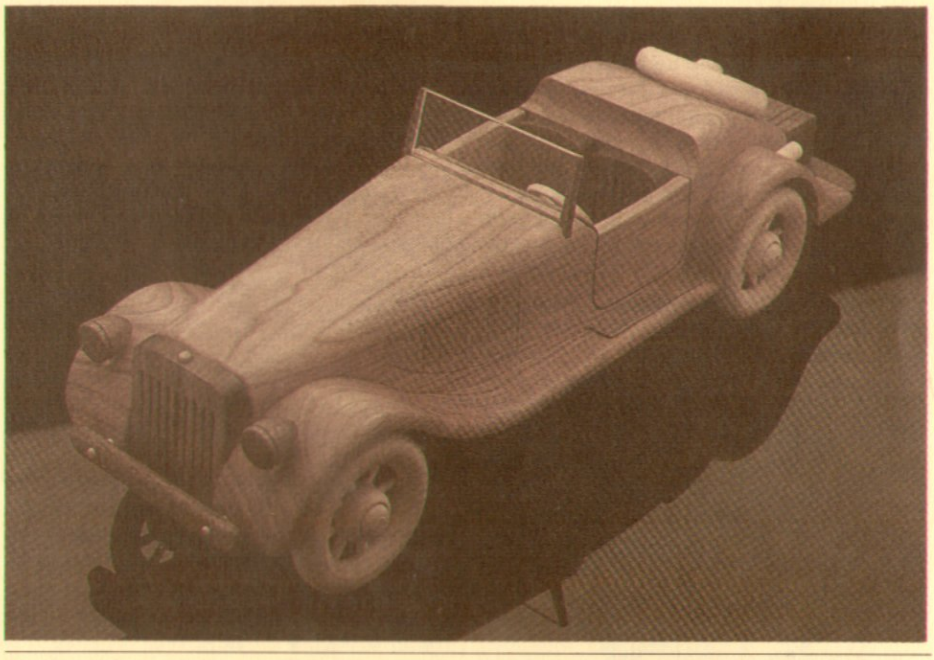

CUTTING THE BODY BLOCK

The car is primarily a band saw project, but the preliminary cuts are made on a table saw for straight reference lines.

BODY BLOCK. The first straight cuts are made to get a solid block for the body that's 2" thick by 3" wide and 10 13/16" long, see Fig. 1. A block this size can be made by gluing up 4/4 stock (13/16" thick actual). But a better approach is to cut it from a 3" x 3" turning square for a uniform grain pattern, see Sources, page 24.

TRACE PROFILE. After the block is cut to size, the profile is traced on one side. To do this, you can scale up the drawing shown in Fig. 2. Or, you can order patterns for the body and fenders, see Sources, page 24.

Once you have the pattern, make a photo-copy of it and paste the copy to the side of the block to use as a cutting pattern.

AXLE DADOES. Following the pattern on the side of the block, cut two 3/8"-wide by 3/8"-deep dadoes for the axle support blocks. This can be done in multiple passes with a combination blade or in a single pass with a dado blade, see Fig. 3.

WINDSCREEN SLOT. The last step on the table saw is cutting a kerf to the thickness of the windscreen (see Sources, page 24). To do this, tilt the blade to 20°. Then set the depth so the kerf will be 3/8" deep, see Fig. 2. Now cut the kerf 5" from the front of the car, see Fig. 4.

BAND SAW TO SHAPE

So much for the straight cuts. From here on all the work is done on the band saw. Since this requires smooth, continuous cuts with tight curves, I found a 1/8" blade to be the best all-around choice for the project. (For more band saw tips, see page 16.)

CUTTING SEQUENCE. Cutting the car body out of the block requires a specific cutting sequence, see Fig. 5. The sequence is pretty logical, but the two most difficult cuts to make are the first and second. This is because the edges of the kerfs from these first two cuts will be finished edges on the car doors.

COCKPIT CUTOUT. The first step is to remove a 3/8"-deep piece to form the upper part of the cockpit (the area above the door), refer to Fig. 2. Begin by making a 45° straight cut from the front to form the dashboard. Stop the cut just before the blade touches the horizontal line that will be the top edge of the door, see Fig. 2.

After forming the dashboard angle, the rest of the piece is removed with one continuous cut — starting at the rear this time. Start at the top of the curve at the back of the cockpit (behind the seat), see Fig. 6. Then continue in a straight line along the top edge of the door until the blade reaches the dashboard cut.

DOOR CUTOUT. The second cut completes the cockpit. This is the most difficult pass on the whole project because both sides of this kerf will be visible where the door fits into the body. This means the straight edges have to be straight and the curves have to be cut in one continuous movement.

I made this cut on some scrap pieces first, then on the real thing. After cutting out this U-shaped piece, set it aside. It will be used later to make the doors.

FIGURE 1

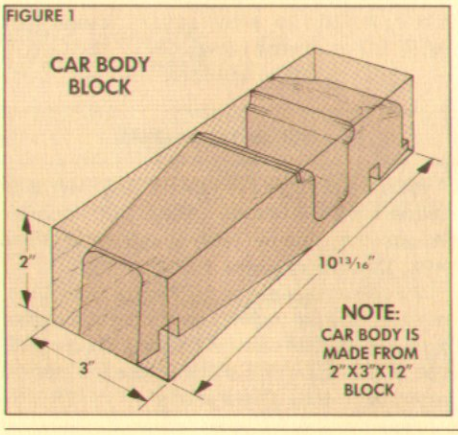

FIGURE 2

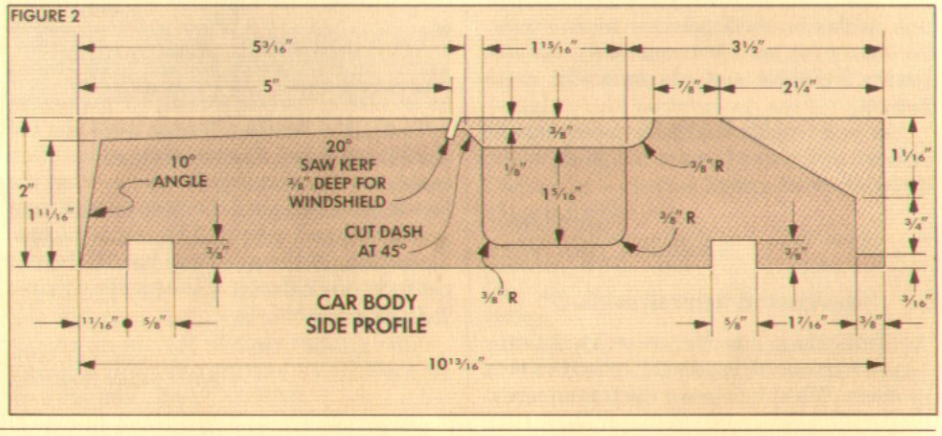

FINAL PROFILE. The remaining band saw cuts that turn the block into a classic car body are pretty forgiving. These are just a series of passes that bring the body to a classic shape.

Begin by cutting along the top of the hood to taper it from the front to the dashboard, see Fig. 5. Then cut the angle on the very front end where the radiator will be. Also, cut the taper at the rear (to form the top of the trunk). And cut out the small section where the tool box will go (behind the trunk).

After these cuts are made, lay out and cut two tapers on the sides of the hood so it's 1⅝" wide at the front, see Fig. 7. Then taper the sides of the trunk so it's 2" wide at the back. Finally, round over the top edges of the hood and trunk with a rasp or file, see Fig. 7.

CAR DOORS

Now the doors can be made from the U-shaped piece that was cut out to make the cockpit. Begin by slicing a 3/16"-thick door off each side of this piece, see Fig. 8.

WEATHER-STRIPPING. The doors won't fit tightly into their openings because of the kerf made by the band saw blade when this piece was cut out. To make up the difference, I used a piece of veneer. (The veneer adds a nice accent line.)

BEND TO FIT. To do this, cut two strips of 1/16"-thick veneer ⅜" wide by 6" long. (For more on the veneer cutting technique, see page 11.) To fit the strips to the door opening, they're bent to match the profile of the door.

PRESS TO SHAPE. Begin by soaking the strips in warm water for a few minutes to make them pliable enough to bend without breaking. Then press them into the door opening and slide the door down into the opening, see Fig. 9.

If the fit is too tight, lightly sand the edges of the door. When everything fits just right, press the doors completely down into the openings and clamp them until the veneer dries in the shape of the door.

GLUE IN PLACE. After the trim strips dry to shape, they can be glued in place. I did this in two steps. First, glue the strips to the edges of the doors. Apply glue to the edges of the doors, then press the doors and the strips back into the opening, and clamp them in place until the glue dries.

TRIM WASTE. After the glue dries, remove the doors from the openings, and trim the veneer flush with both the inside and outside surfaces of the door with a sharp knife, see Fig. 10.

FINAL FIT. After trimming the veneer, the doors can be glued to the car's body. To do this, apply glue to the veneer, then reclamp the doors. When the glue is dry, sand the outside surface of the door, the veneer, and the body flush and smooth.

FIGURE 3

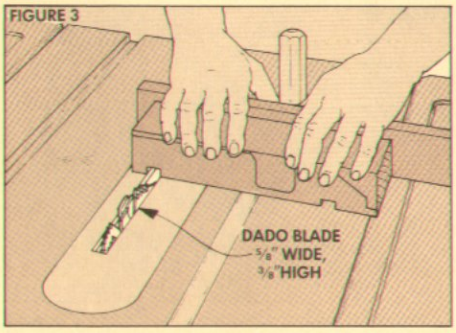

FIGURE 4

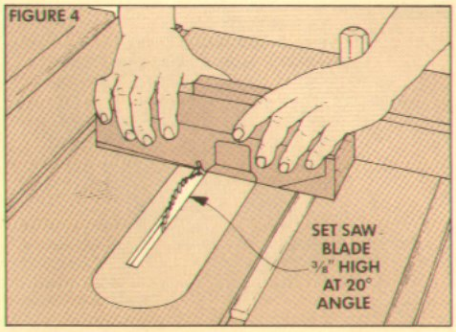

FIGURE 5

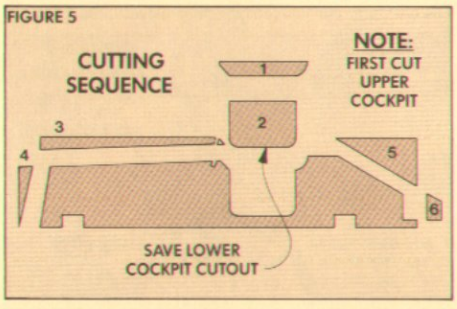

FIGURE 6

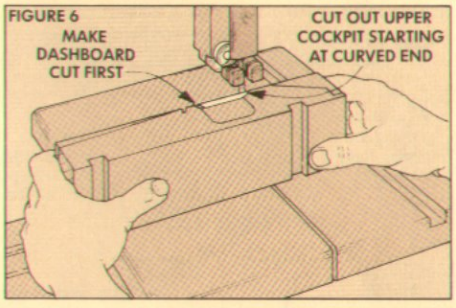

FIGURE 7

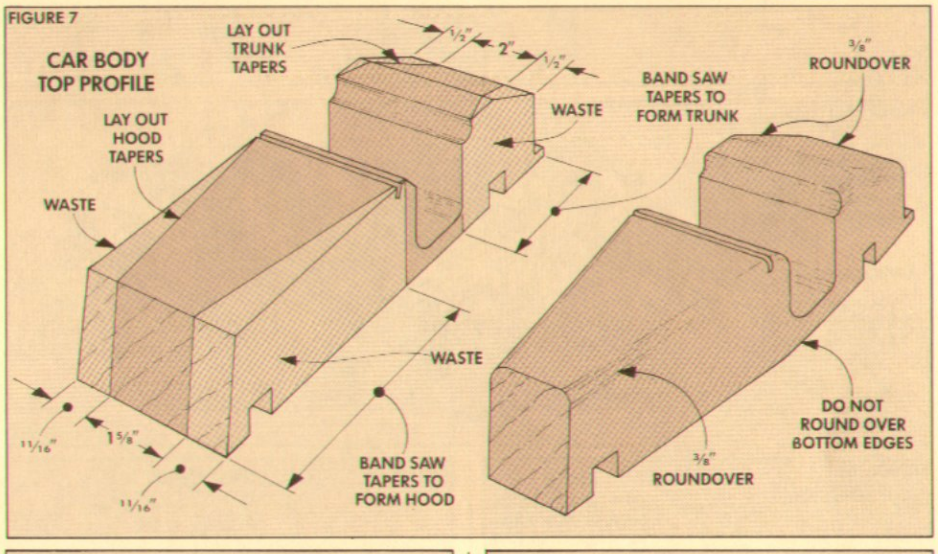

FIGURE 8

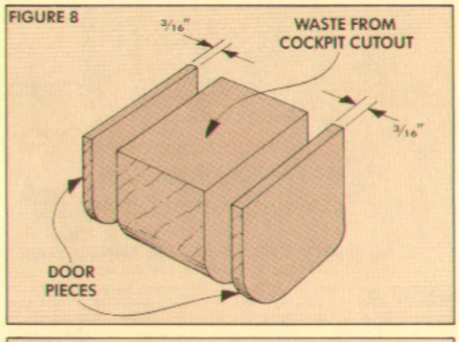

FIGURE 9

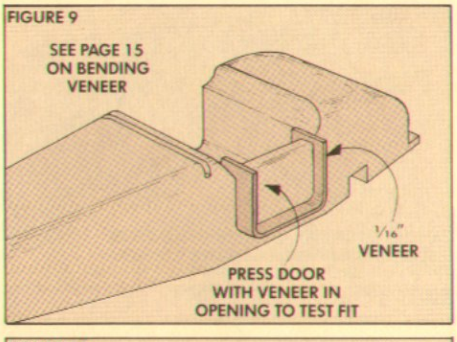

FIGURE 10

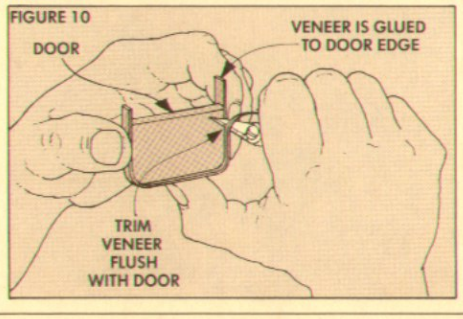

FIGURE 11

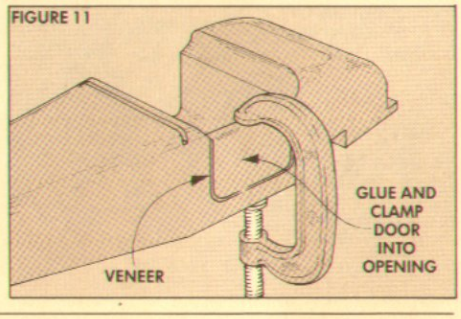

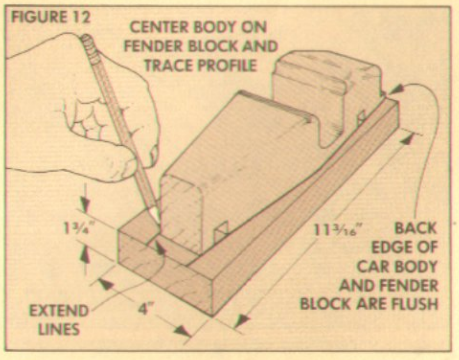

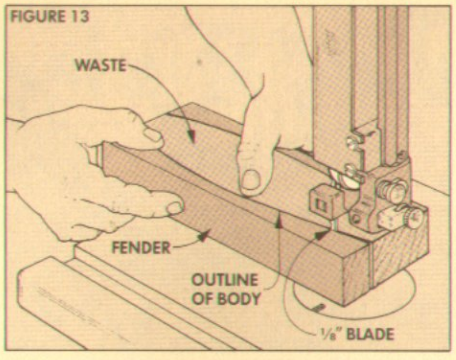

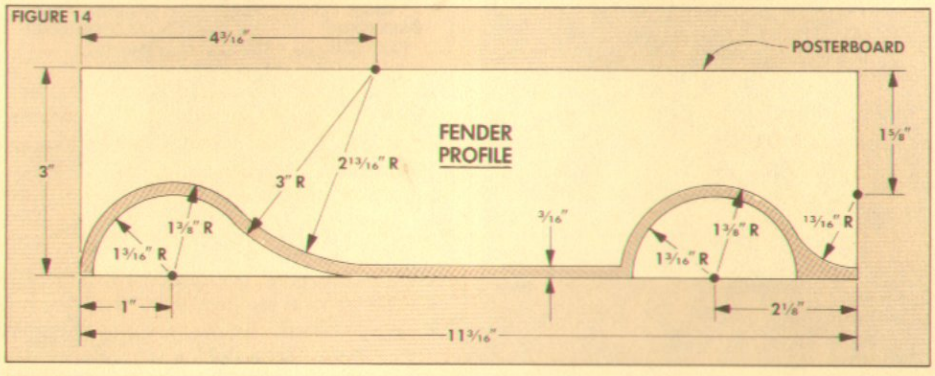

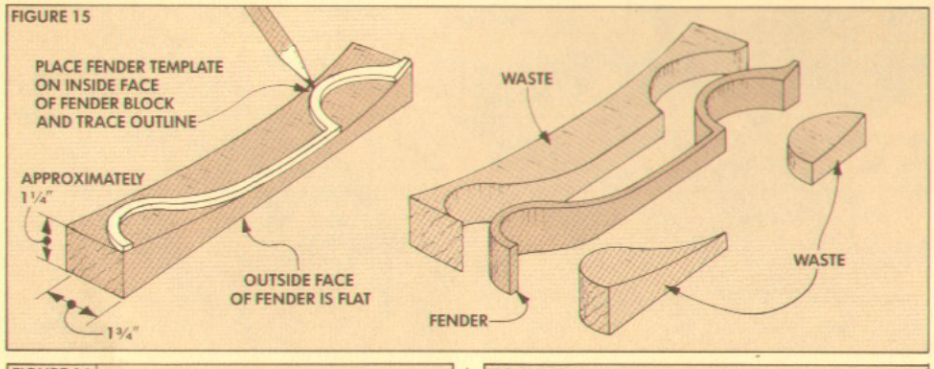

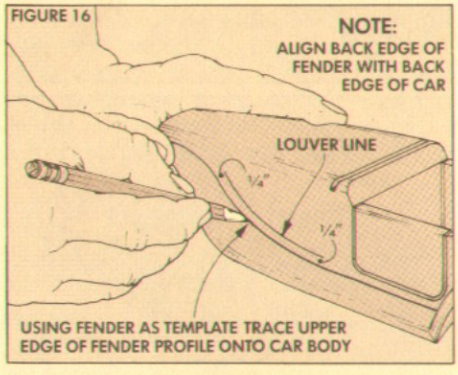

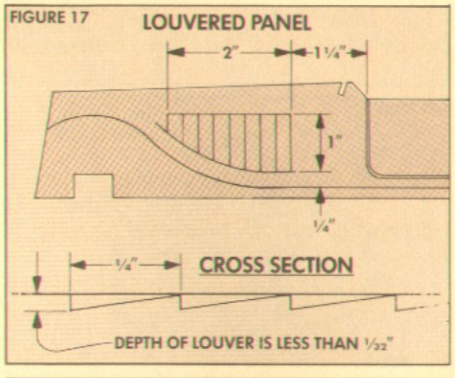

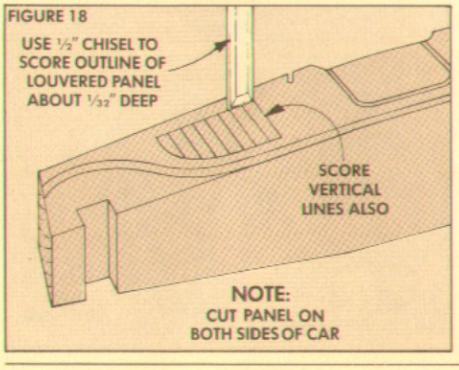

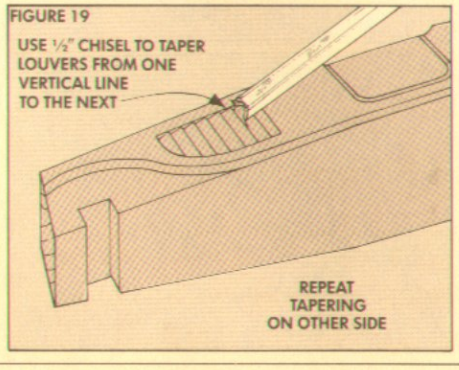

FENDERS

The nice thing about working on this roadster is that it's a *real* car. That is, it has fenders and a running board. I cut the fenders and running board for each side as one continuous piece, refer to Fig. 15. The trick is to contour the inside edge to fit the contoured shape of the body.

TRACE BODY PROFILE. Start with a block of 8/4 stock (1¾" thick) that's 4" wide by 11 3/16" long (⅜" longer than the body). To make the two fender pieces, center the body of the car on top of this block and trace the outline. Then extend the outline to the front of the block, see Fig. 12.

CUT BODY PROFILE. After tracing the body profile, cut out the two pieces for the fenders, see Fig. 13. While making these cuts, be careful to cut on the waste side of the line, leaving the line visible on the fender piece, see Fig. 13. Then sand down to the line so both pieces fit tightly against the body, refer to Fig. 20.

FENDER PROFILE. Next, lay out the profile shape of the fenders and running board. To do this, I made a template out of posterboard. (You can draw the outline from the dimensions given in Fig. 14 or send for the free pattern.)

The most critical measurement on the template is to make sure the centers of the wheel wells are aligned with the centers of the axle dadoes in the body block. (Adjust the overall length of the template, if necessary, to align these points.)

Now trace the template on the inside (curved) surfaces of the fender blocks. Then cut out the shape with a band saw, see Fig. 15.

LOUVERED COWL

After the fenders were cut to shape, I made louvers in the cowl.

DRAW FENDER OUTLINE. To locate the louvers, begin by tracing the entire fender outline on both sides of the car body, see Fig. 16. (These outlines will also be used for fitting the fenders later.)

DRAW PANEL OUTLINE. Then slide the fender up ¼" and draw the bottom curved line of the louvered area parallel to the fender line, see Fig. 16. Now lay out the vertical lines of the louvers spaced ¼" apart, see Fig. 17.

CUT LOUVERS. After drawing the panel outline, the ventilating louvers are cut into the side of the cowl about 1/32" deep. To do this, first score all the lines with a ½" straight chisel, see Fig. 18. Then shape the louvers by paring at an angle from the top of one scored line to the full depth of the next one, see Fig. 19.

MOUNT FENDERS. When the louvers are finished, the fenders can be mounted to the body. Apply glue to the edges of the fenders, and clamp them to the body with rubber bands, see Fig. 21.

RADIATOR

While the glue was drying on the fenders, I went to work on the radiator. I used a contrasting wood (walnut) for the radiator (and for the seats that are made next).

CUT STRIP. The radiator is cut from a strip that's ¼" thick and about 6" long (enough to provide a handle when cutting the vents). As for the width of this strip, rip it to match the width between the front fenders, see Fig. 22.

TRACE OUTLINE. Before cutting the vents, trace the outline of the front of the cowl on the back of the strip to establish the profile of the radiator, see Fig. 22.

VENTS. The radiator vents are band saw kerfs spaced ⅛" apart and stopped ⅜" from the top, see Fig. 23. To keep the kerfs uniform, I made a jig for the band saw.

JIG. The jig consists of a fence, a stop block, and five ⅛"-thick spacers to lay out the vents. (To make the spacers, rip one strip 25" long and ⅛" thick. Then cut off 5" lengths.)

To set up the band saw, position the fence so the saw blade is aligned exactly on the centerline of the radiator strip. Then clamp the stop block in place to stop the vent kerfs ⅜" from the top outline of the radiator, see Fig. 24.

CUTTING SEQUENCE. To get evenly spaced kerfs, begin by cutting the center vent. Then place a spacer against the fence and cut a kerf parallel to the first. Now flip the stock over and make a second cut parallel to the center kerf on the opposite side of the radiator strip.

To make the remaining vents, add another spacer and repeat the cuts on each side. Keep adding spacers until the kerfs are about ¼" from the sides of the radiator.

INSTALL RADIATOR. After all the vents are cut, band saw the top of the radiator to the traced line of the cowl. Glue it in place and sand it smooth. Then top it off with a radiator cap made from a ⅛" dowel, see Detail, Fig. 24.

SEATS

The next step is to make seats just about the same way as the radiator. Cut two strips ⅜" thick by about 6" long (enough to hold onto). Then rip these strips to width so they fit side by side in the cockpit.

SEAT BACKS. To simulate pleats, I made a series of parallel kerfs using the same procedure as on the radiator, see Fig. 25. Then to complete the seat backs, contour them with a half-round file, see Fig. 27.

SEAT CUSHIONS. The seat cushions are made the same way as the backs, except they're not contoured, see Fig. 26. To mount them in the cockpit, file the bottom surface at an angle so it slopes ⅛" front to back. (Note: the seat cushions are mounted so the open end of the kerfs is against the back of the cockpit.)

FIGURE 20

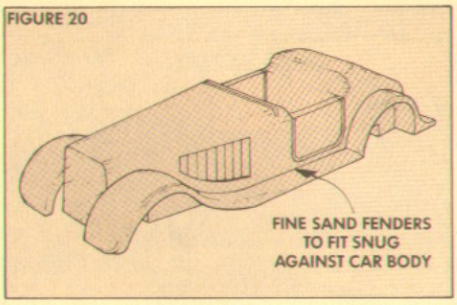

FIGURE 21

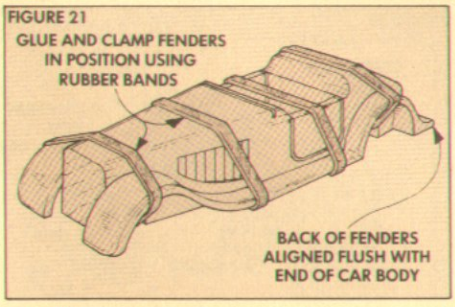

FIGURE 22

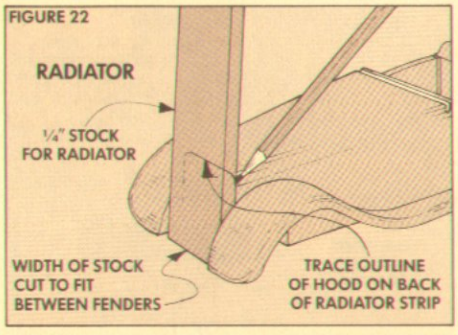

FIGURE 23

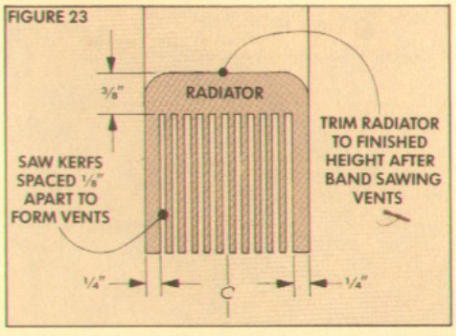

FIGURE 24

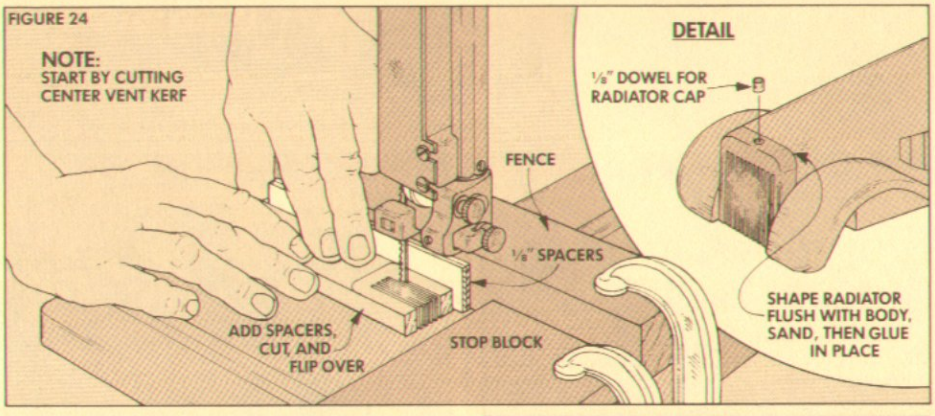

FIGURE 25

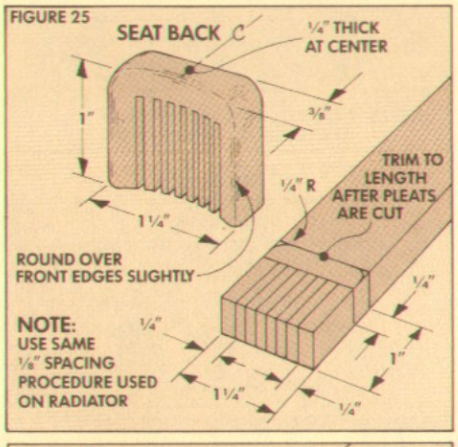

FIGURE 26

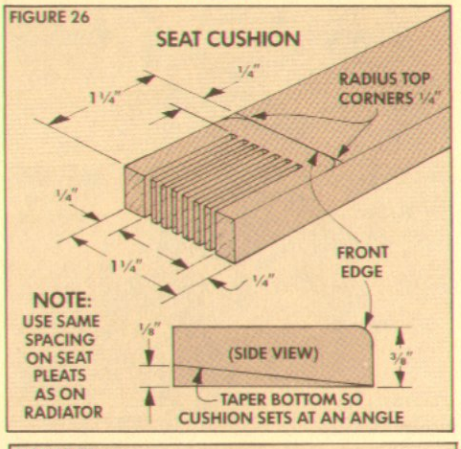

FIGURE 27

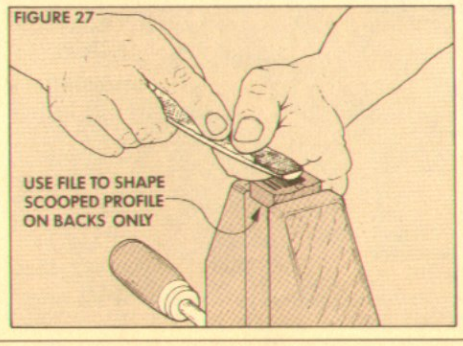

FIGURE 28

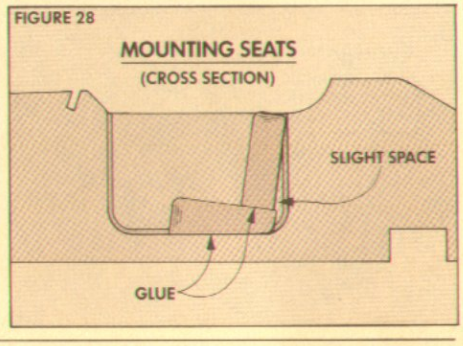

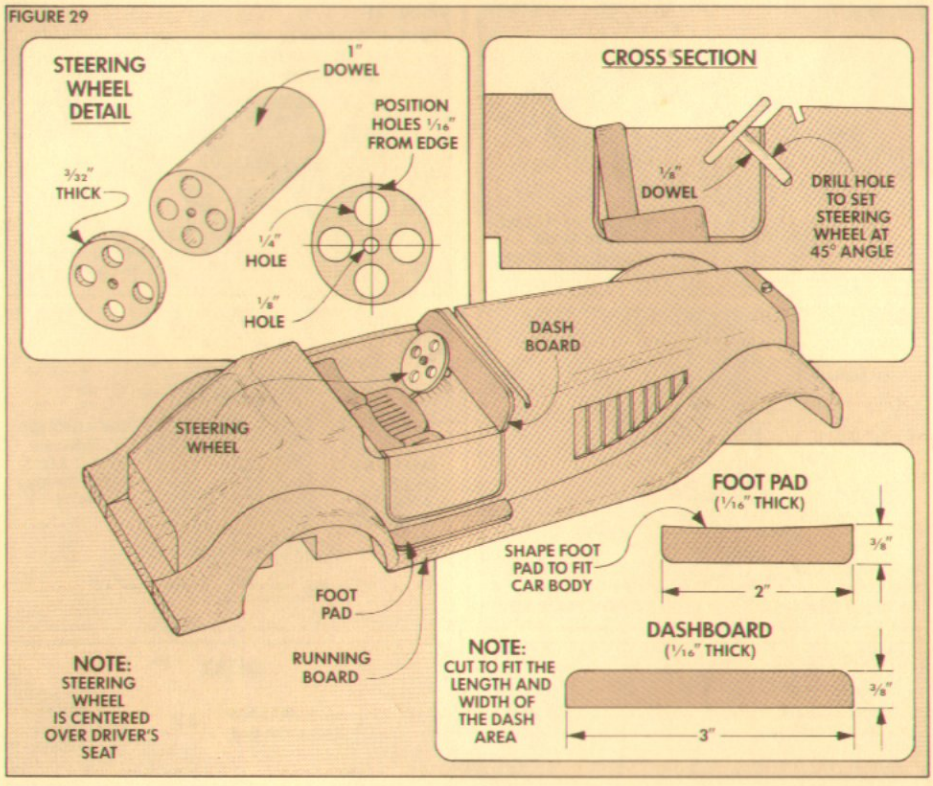

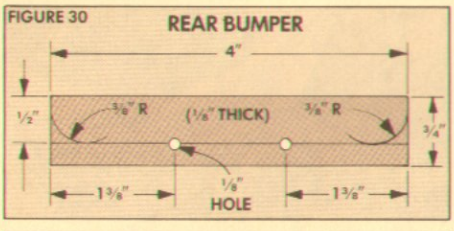

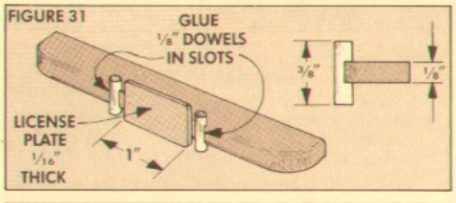

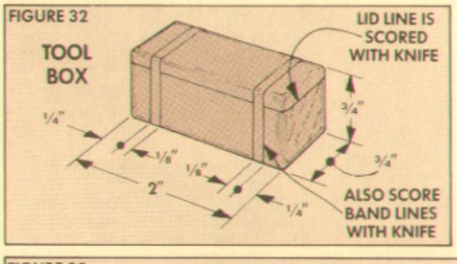

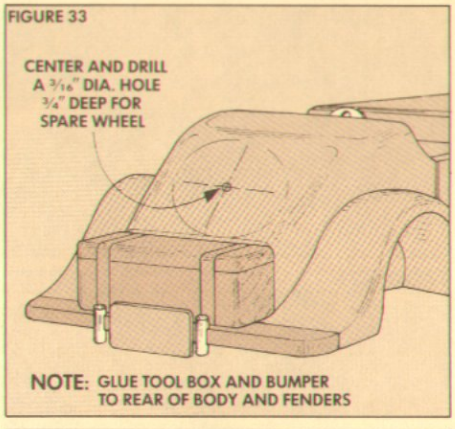

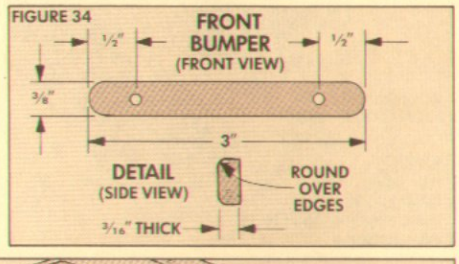

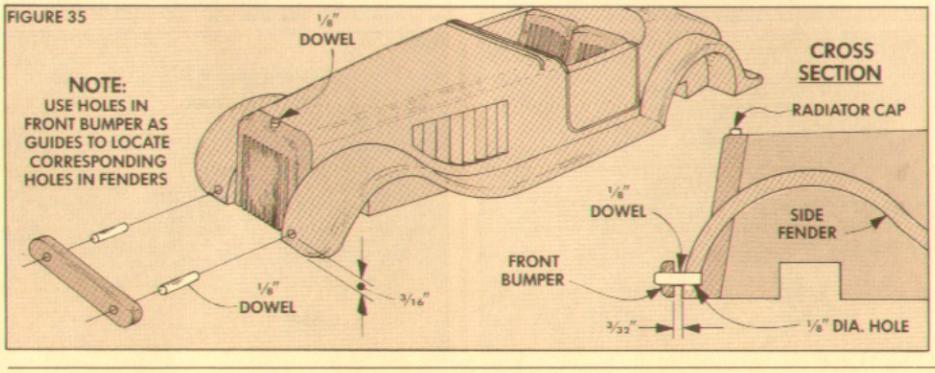

DETAILS

As with any project, details make the difference. To make a big difference on this car, I added quite a few details. The first of these was a steering wheel.

STEERING WHEEL. The steering wheel is made by drilling four 1/4" holes in the end of a 1" dowel, see Steering Wheel Detail in Fig. 29. Then drill a 1/8" hole in the center to mount the steering wheel to the column. Now slice the steering wheel off the end of the dowel.

To mount the steering wheel, drill a 1/8" hole at a 45° angle under the dashboard. Then mount the steering wheel on a 1/8" dowel and glue the dowel into the hole, see Cross Section in Fig. 29.

DASHBOARD. After mounting the steering wheel, the dashboard is made from a 1/16"-thick strip of walnut. Radius the upper corners to match the hood, and glue it in place, see Fig. 29.

RUNNING BOARD. To prevent wear and tear to the running board, I added foot pads made from walnut strips, see Fig. 29.

BUMPERS, BOXES, AND BRIGHT LIGHTS

Defensive driving takes on special significance when your fine roadster has to share narrow roads with Crosleys, Kaiser-Fraziers, and DeSotos. To prevent fender-benders, I made a pair of bumpers.

REAR BUMPER. The rear bumper is complete with bumper guards and a license plate. Begin by cutting a piece of 1/8"-thick walnut 4" long and to a rough width of 3/4", see Fig. 30. Then drill two 1/8"-dia. holes (that will become slots to hold the bumper guards) 1 3/8" from both ends of the bumper, and 1/2" from the inside edge.

Now rip this piece to 1/2" wide, cutting though the hole centers to form notches for the bumper guards, see Fig. 30.

BUMPER GUARDS. The bumper guards are made by gluing 1/8"-dia. dowels into the notches. Then mount a license plate made of veneer between the guards, see Fig. 31.

TOOL BOX. I also added a tool box that's mounted over the back bumper. Begin by cutting a rectangular block, see Fig. 32. Then scribe the straps and the lid line with a knife, and glue the box in place.

SPARE WHEEL MOUNT. Before moving to the front of the car, I made provisions for mounting the spare wheel. To do this, bore a 3/16" hole in the center of the rear deck, see Fig. 33.

FRONT BUMPER. Now, onto the front of the car. To make the front bumper, cut a piece of 3/16"-thick walnut to size, see Fig. 34. Then radius the ends and round over the front edges, see Fig. 34.

The front bumper is mounted to the fenders with two 1/8" dowels, see Fig. 35.

HEADLAMPS. After the bumpers were installed, I turned two custom headlamps on the drill press. However, before "turn-

ing" the lamps, drill ⅛" mounting holes 5/16" from the end of the ½" walnut dowels used to make the headlamps, see Fig. 36. Then drill the mounting holes in the fenders.

TURN LAMPS. In order to turn the lamps to shape, use a small taper file to score two incised lines that form the lens, see Fig. 37. Next contour the cone-shaped back of the lamp with a flat file. Then saw the lamp free from the dowel at the top incised line.

MOUNT LAMPS. To mount the lamps, glue one end of the ⅛" dowels into the lamps and the other end through the holes drilled in the fenders. Then insert the lamps until they're almost touching the fender.

SUSPENSION

As I was about to mount the wheels, I began to think about making the smoothest possible ride. So, I added spring suspension.

AXLES. Begin by cutting two axle blocks to size and bore 3/16"-dia. holes in the ends for the axles, see Fig. 38.

The holes used to mount the axle blocks to the body are bored in three steps. The first holes (¼" dia. by ¼" deep) are counterbores for the springs. Next, drill 5/32" shank holes the rest of the way through for the screws that hold the axle. Then countersink for the screw heads on the bottom of the axles, see Fig. 38.

MOUNT AXLES. To position the axles, mark centerlines on the blocks and on the car body and align the centerlines. Then push an awl through the holes in the axle to mark the locations of the holes in the car body, see Fig. 39.

MOUNTING HOLES. Next, mounting holes are bored into the bottom of the car body. Begin by boring ¼"-dia. clearance holes for the springs, see Fig. 40. Then drill 1/16" pilot holes ¾" deep.

SPRINGS. Small compression springs are available at better hardware stores, see Sources, page 24. To mount the springs, slip them into the counterbored holes in the axles and car body. Then tighten the screws into the holes until there's ⅛" space between the axles and body, see Fig. 41.

MOUNT WHEELS. Now the wheels can be mounted on the axles. To make certain the tires don't rub on the axle block, slip a cardboard spacer between the wheel and body to establish how deep the axle pin should be glued into the hole, see Fig. 42.

SPARE WHEEL. After all four wheels are mounted on the axles, the spare can be mounted on the rear deck, see Fig. 43. (The "inside" hub has to be filed flat so the wheel will fit flush on the trunk.)

WINDSCREEN. Now, I was ready to install the windscreen. The windscreen is made from a piece of Plexiglas trimmed to ¼" less than the length of the kerf in front of the dash. Finally, make two tapered struts and glue them to the edges of the windscreen, see Detail, Fig. 44.

FIGURE 36

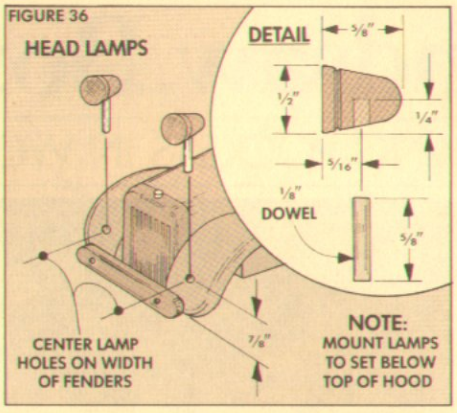

FIGURE 37

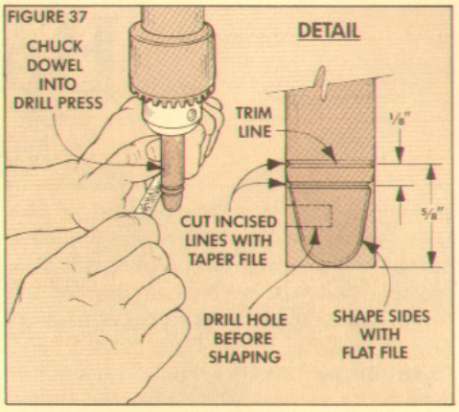

FIGURE 38

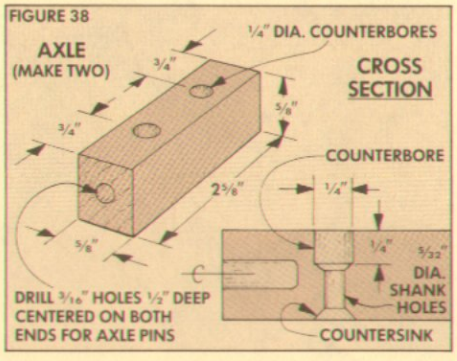

FIGURE 39

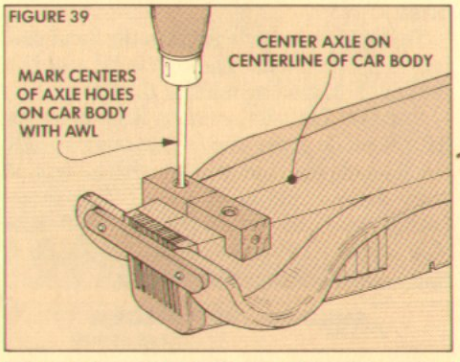

FIGURE 40

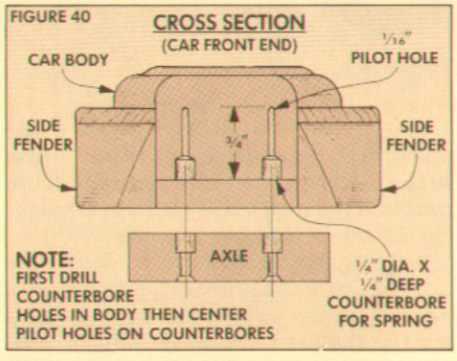

FIGURE 41

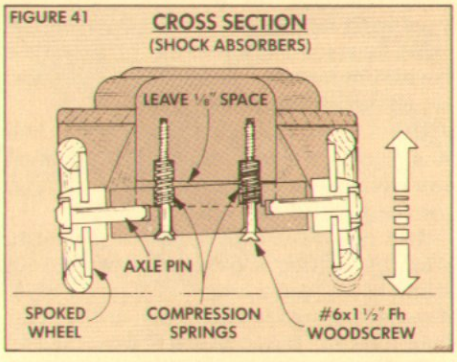

FIGURE 42

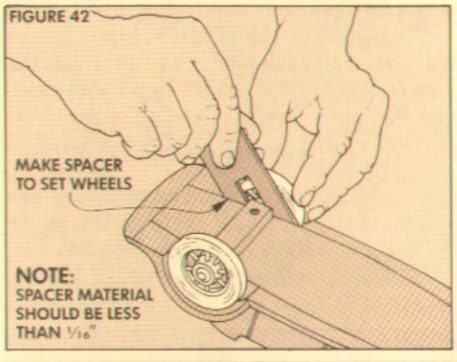

FIGURE 43

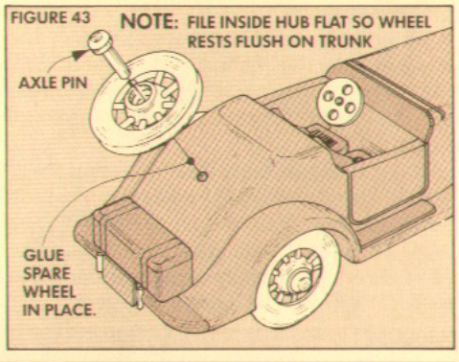

FIGURE 44

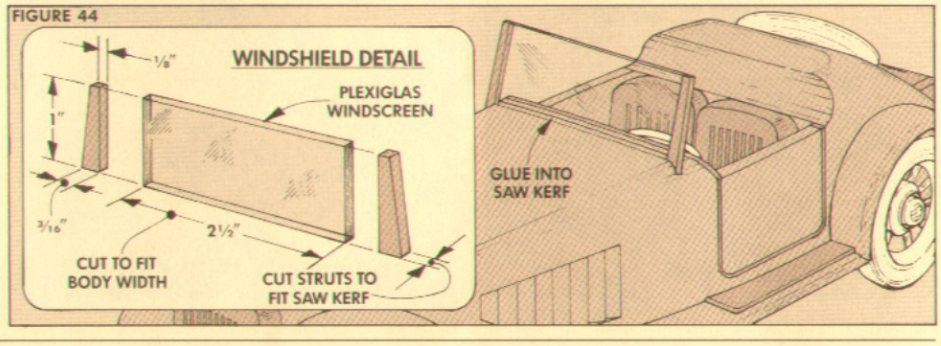

Bandsaw Boxes

MAKING POCKETS IN WOOD

Making a band saw box is kind of like working a jig saw puzzle — except you leave out some of the pieces when you put it back together. Once the box is glued together, the places where you left out pieces form openings or pockets. In the boxes shown here, these little pockets are perfect for jewelry or desk items such as paper clips and thumb tacks.

There are two basic parts to the band saw boxes shown in the photo: the lid and the bottom. I started by making the lid.

THE LID. The semi-circular designs in the lid are made from two contrasting woods (such as cherry and maple) with a strip of dark veneer between them. The semi-circles could be cut freehand, but I was able to get a smoother cut with a platform that rotated on top of a circle jig.

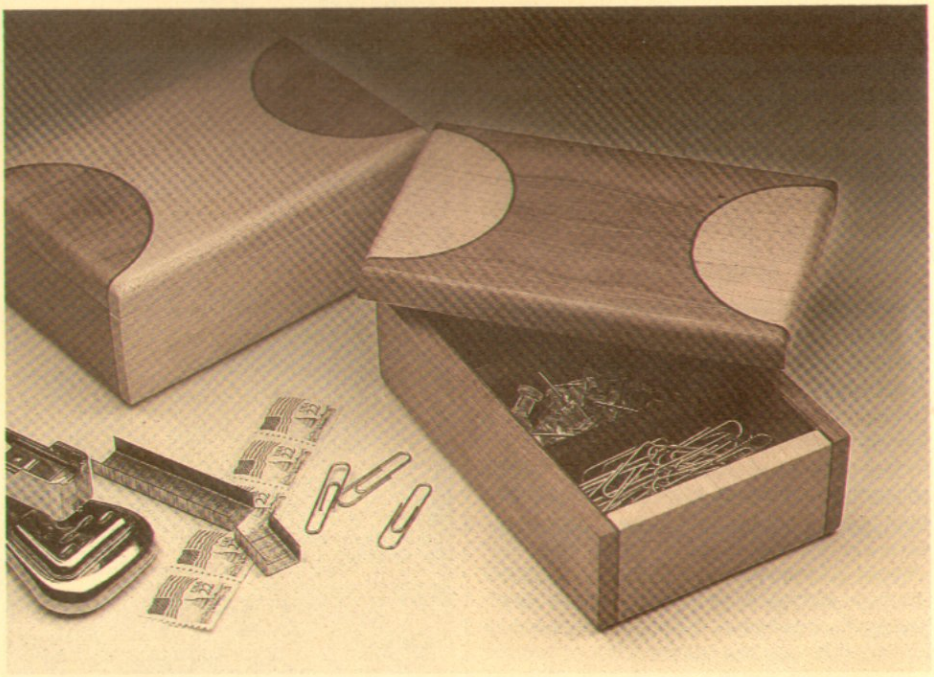

BUILDING THE PLATFORM

Before building the platform, check that your band saw blade is exactly 90° to the table. I used a ⅛" blade for all the cuts on the boxes. For more on setting up the band saw, see the article beginning on page 16.

CIRCLE JIG. The platform pivots on a nail in a circle jig that's attached to the band saw's table. (To build a band saw circle jig, see the plans on page 19.)

THE PLATFORM. To build the platform, start by cutting a piece of plywood to a width of 4½" and a length of 8", see Fig. 1. Then, to accept the pivot nail, drill a pivot hole 1½" from the edge and 6" from the end of the platform.

Shop Note: In order to drill the hole the same size as the pivot nail, I made a "drill bit" from another nail of the same size. Just cut the head off the nail and chuck the nail in the drill.

END CLEAT. On top of the platform, there are two cleats to hold the blank in position while cutting. Nail an end cleat 90° to the edge of the platform with the edge of the cleat directly over the center of the pivot hole. (Don't nail the side cleat on yet.)

ADJUST BASE BOARD. Now place the platform on the circle jig and adjust the jig so the teeth are even with the front of the cleat and the edge of the platform is touching the side of the blade, see Fig. 2.

ROTATE THE PLATFORM. To determine the location of the side cleat, make a semi-circular cut through the platform by rotating the platform clockwise until the cut nicks the end cleat, see Detail in Fig. 3.

Then remove the platform from the circle jig and nail a side cleat ¼" from the *outside* of the kerf and 90° to the end cleat, see Fig. 3.

THE LID BLANK

Once the platform is complete, work can begin on the lid. Start building the lid by cutting two pieces of contrasting 4/4 stock (13/16" actual thickness) to a width of 4" and a length of 5½", see Fig. 4.

Then, stick the two contrasting pieces together face-to-face with double-sided carpet tape so the ends and edges are flush. (After cutting, the light and dark woods are switched to make a lid with contrasting colors, refer to Fig. 8.)

CUT THE SEMI-CIRCLES. To cut a semi-circle in the end of the taped together blank, mount the blank onto the platform so it's tight into the corner formed by the cleats. Turn on the band saw and rotate the platform 180° to cut a semi-circle on one end, see Fig. 5. Then flip the blank over end-for-end (keeping the same edge against the side cleat) and cut a second semi-circle on the other end, see Fig. 6.

TRIM TO WIDTH. Once the semi-circles are cut in each end, there should be a measurement of ¼" from the semi-circular cutouts to the edge on *one* side of the taped together blank. Since this "leg" is ¼" wide,

FIGURE 1

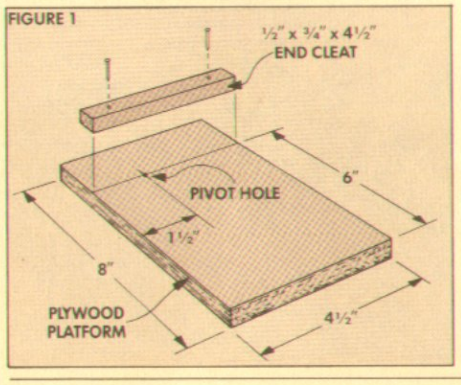

FIGURE 2

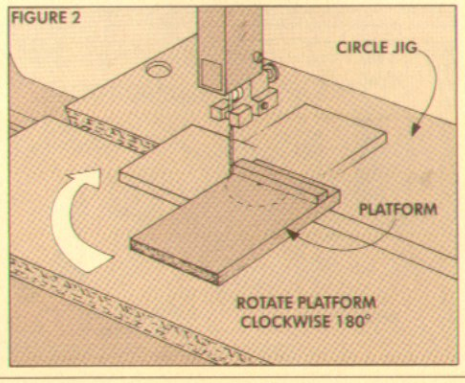

FIGURE 3

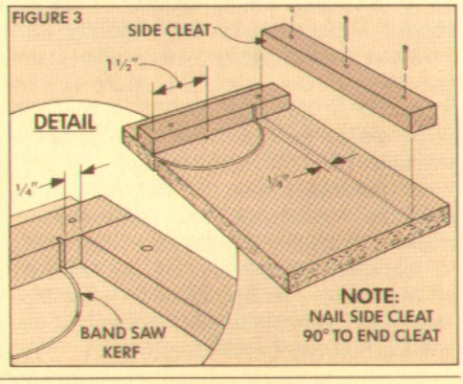

and the semi-circle is 3″ wide, and the overall blank is 4″ wide, there will be *more* than ¼″ on the other side. To create an even ¼″ "leg" on both sides, trim the blank to final width, see Fig. 7.

REARRANGE THE PIECES. Now pull the taped together pieces apart and rearrange them so the main part of the lid is one color of wood and the semi-circles are the contrasting wood, see Fig. 8. (You actually have enough pieces to make two lids.)

MAKING VENEER

To add a highlight to the design and fill the space of the band saw kerf, I glued strips of walnut veneer between the light and dark pieces. Two things are important with the veneer strips. They have to be cut from straight-grained stock and they have to be the same thickness as the band saw kerf.

CHOOSING THE MATERIAL. Since the veneer strips are bent into a semi-circle, cut the strips from straight-grained stock to keep them from splitting when bending. When choosing the stock look at the grain lines. Straight-grained stock has grain lines that run parallel to the sides of the board and not at an angle to the sides, see Fig. 9.

CUTTING TO SIZE. In order for the semi-circular "male" piece to fit in the semi-circular "female" recess, the veneer strip has to be the exact thickness of the band saw kerf. Before cutting this strip, I made a gauge to test its thickness. To make the gauge, just cut a kerf in a piece of scrap, see Detail in Fig. 10.

Then, to determine the exact location of the rip fence when cutting the veneer, I used a trial and error process. Start by setting the rip fence (or a board clamped to the table as a fence) about 1/16″ from the blade and trim a strip of veneer out of a piece of scrap, see Fig. 10.

Test the fit of the strip into the kerf in the thickness gauge. If the veneer is too thick to fit into the gauge, nudge the fence a hair *closer* to the blade to make a thinner strip of veneer. If it's too loose, move the fence slightly *away* from the blade to make a thicker strip.

CUT THE VENEER. When the strip fits perfectly, cut all the veneer for the whole project. For each box lid, cut two strips of veneer from 4/4 stock to a rough length of 8″, see Fig. 11. While the saw was set up, I also cut two strips of veneer for the box bottom, refer to Fig. 18 on page 12. Cut these strips from the outside faces of a piece of 4/4 stock that's 2″ wide and 6″ long, see Fig. 11.

GLUE TOGETHER LID

After the veneer is cut, glue and clamp the lid pieces together with the veneer strips between them, see Fig. 12. Finally, use a hand saw or the band saw to trim off the excess veneer flush with the ends of the lid.

FIGURE 4

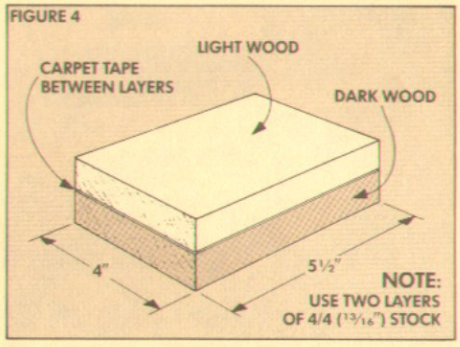

FIGURE 5

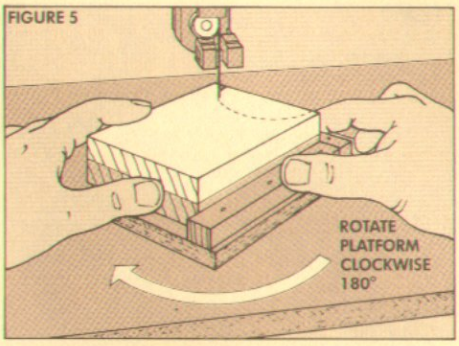

FIGURE 6

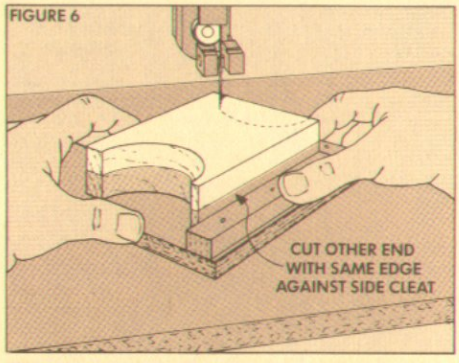

FIGURE 7

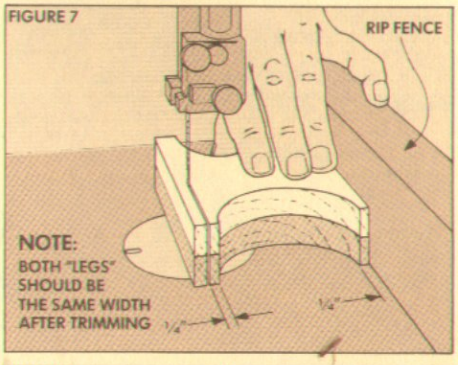

FIGURE 8

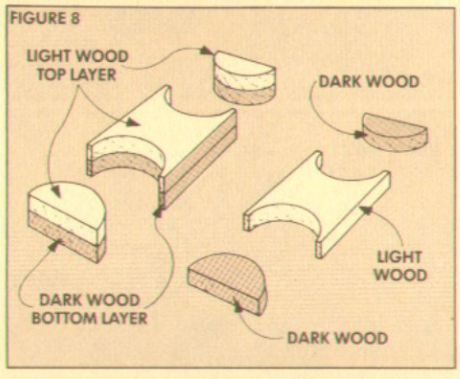

FIGURE 9

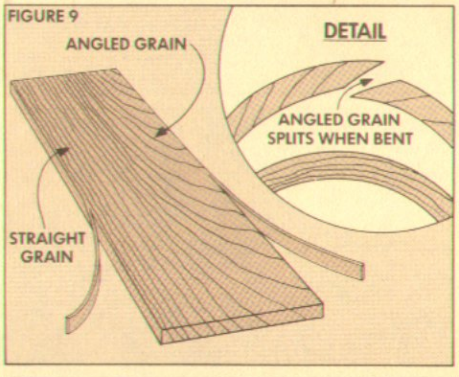

FIGURE 10

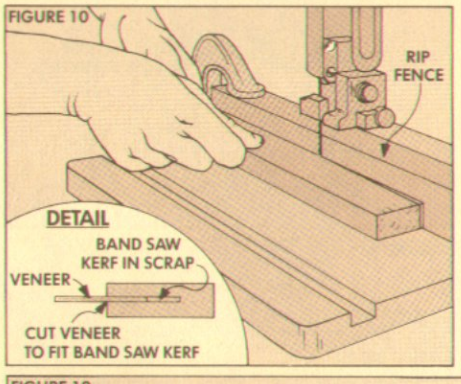

FIGURE 11

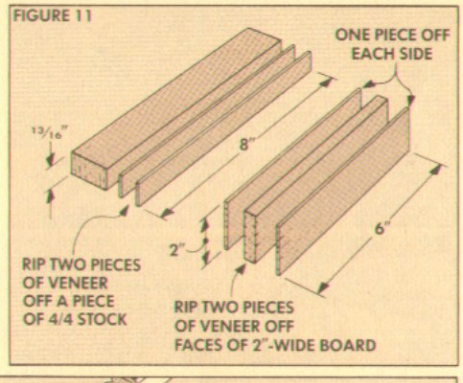

FIGURE 12

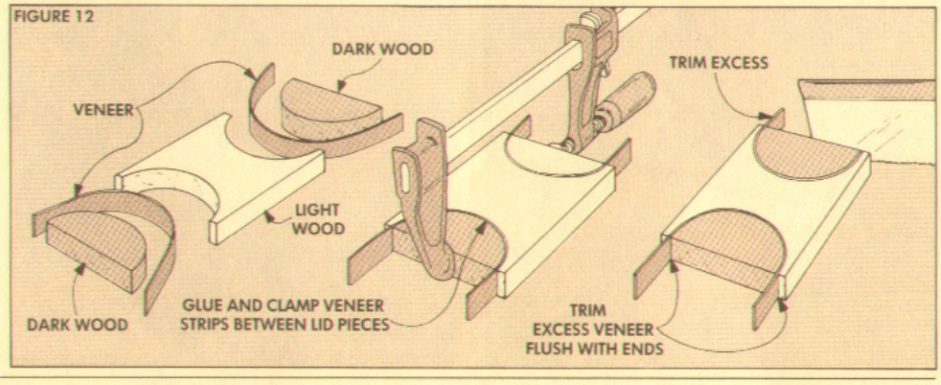

FIGURE 13

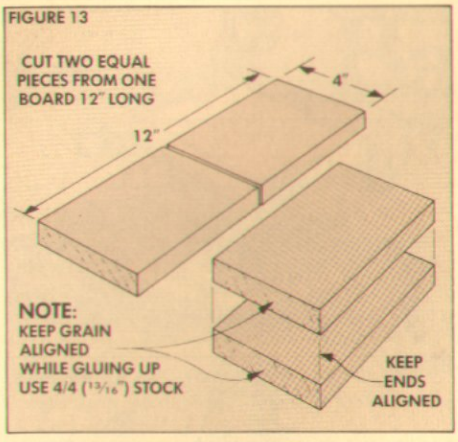

FIGURE 14

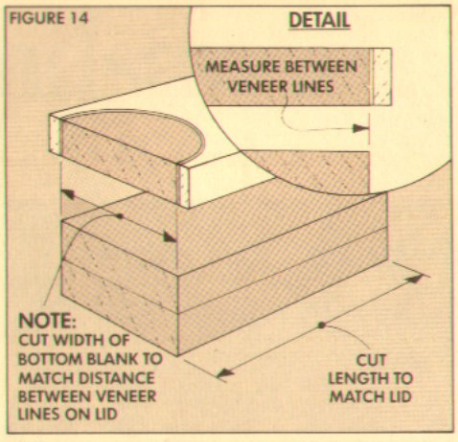

FIGURE 15

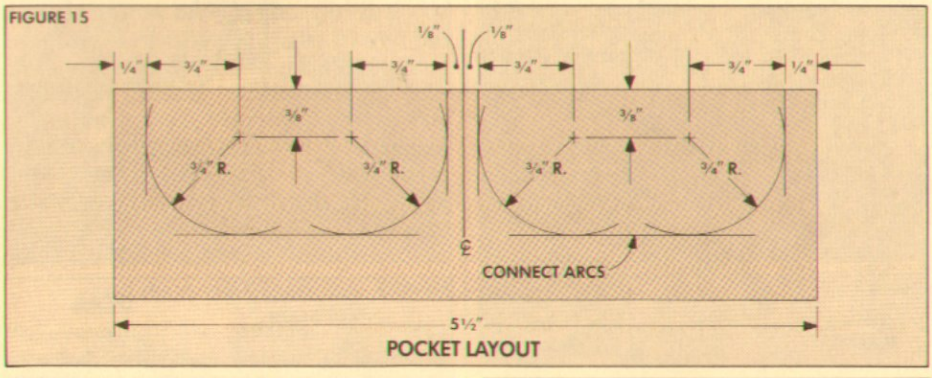

POCKET LAYOUT

FIGURE 16

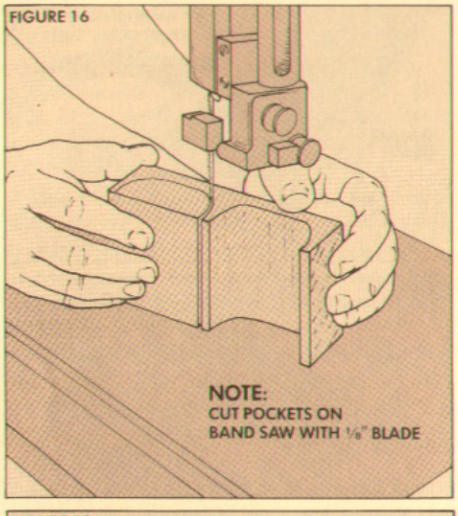

FIGURE 17

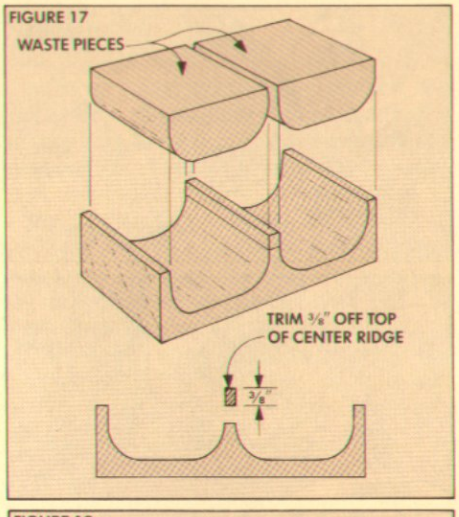

FIGURE 18

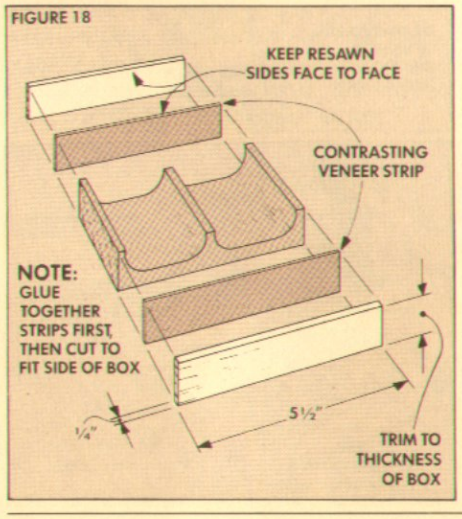

FIGURE 19

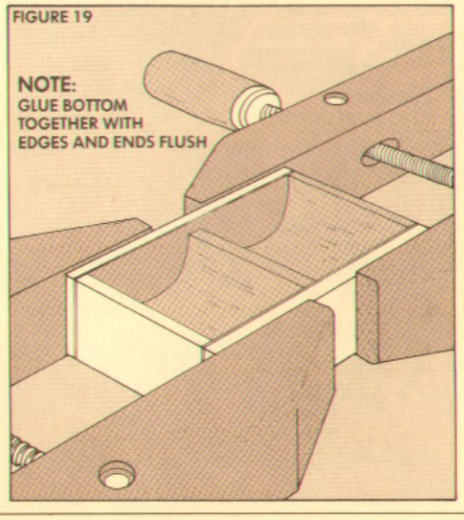

THE BOX

After the lid was complete, I began work on the box itself. The main part of the box is made from the same kind of wood as the semi-circles on the lid. This part can be cut from a blank of 8/4 stock (1¾" actual thickness) or a blank built up from two pieces of 4/4 stock.

BUILD UP STOCK. To make a built-up blank, start by cutting a piece of 4/4 stock to a rough width of 4" and rough length of 12". Then cut this piece in half, see Fig. 13.

After it's cut in half, glue the two pieces together face-to-face, see Fig. 13. To hide the glue joint, align the grain pattern as closely as possible.

CUT TO SIZE. To determine the width of the blank, measure the distance on the lid between the *inside* of the veneer lines, see Fig. 14. Then cut the blank to width to match this dimension and to length to match the length of the lid.

LAY OUT POCKETS. The openings in the box are actually pockets cut out with the band saw. To make the pockets, I started by laying them out on the side of the blank.

First, lay out a point on the top edge of the blank ¼" from each end, see Fig. 15. Then, draw a centerline on the length of the blank and mark points ⅛" out from the centerline to form a ¼" center ridge. To form the sides of the pockets, extend lines straight down from the marks.

Next, locate centerpoints for the bottom radii ⅜" from the top edge and ¾" from the pocket side lines.

Once the centerpoints are marked, strike a ¾" radius to provide a rounded bottom at each corner. Finally, connect the arcs to mark the bottoms.

BAND SAW POCKETS. After the layout was complete, I stood the blank on edge with the layout lines facing up and cut out the pockets with an ⅛" blade, see Fig. 16.

If you're going to cover the pockets with felt, the cut doesn't have to be perfectly smooth. Any rough ridges can be cleaned out with a half-round or round file.

TRIM OFF RIDGE TOP. Next, to allow room for the lid to fit into place, trim ⅜" off the top of the center ridge, see Fig. 17.

THE FRONT/BACK

After the main part of the box was complete, I attached the front and back. Start by cutting a piece of 4/4 stock (using the same wood as the main part of the lid) to a rough width of 2" and rough length of 6". Then resaw a ¼" strip off each face.

GLUE TOGETHER. To make each front and back, glue together one of these ¼" strips and one strip of veneer that was cut previously. (Note: Match the bandsawn faces together so the planed faces will be on the *outside* of the glued-up piece.)

CUT TO SIZE. After the glue dries, cut the glued-up front/back pieces to width and

length to match the box, see Fig. 18.

GLUE SIDES TO BOTTOM. Now glue the front/back pieces to the bottom with the edges and ends flush, see Fig. 19.

SANDING

I think one of the hardest parts of making a box is getting the lid the same size as the bottom. There are a number of ways to do it, but on this box I sanded them the same size. Start by mounting the lid and box in a vise, making sure the veneer strip in the lid is aligned with the strip in the box, see Fig. 20.

Then sand the lid and box flush to each other with a belt sander, see Fig. 21. (Note: The sides could be done with a plane. But the ends present a problem: the veneer strips and end grain could easily chip out.)

Next, remove the box from the vise and sand the top and bottom of the lid. Then sand the bottom of the box so it sits flat.

RABBET THE LID

To make the lid fit down into the box, I routed a ¼"-deep rabbet around the bottom edge of the lid, see Fig. 22.

Start by making a 1/16"-wide rabbet on the ends and then the front and back, see Step 1 in Fig. 22. (Note: Always rout the ends first to prevent chipout.) Then make slightly wider cuts on the ends (see Step 2) until the rabbets fit down into the bottom. If you plan to line the pockets with felt, make the fit loose (about ⅛") to take into consideration the thickness of the felt.

Once the ends are rabbetted, repeat the procedure on the front and back. Sneak up on the final width of the rabbet until the lid fits comfortably down into the box. Then slightly chamfer the bottom edges of the rabbet, see Detail in Fig. 23.

ROUND OVER EDGES. Next, round over the top and bottom edges of the box with a ¼" round-over bit, see Fig. 23.

FINISH. Before lining the inside of the box with felt, I applied two coats of tung oil to the outside of the box and the veneer sides on the inside of the box.

LINE WITH FELT

The inside bottom of the box can be lined with felt or Suede-Tex. (Suede-Tex is a spray-on felt-like material, see *Woodsmith* No. 46 for more information.)

To line the bottom with felt, first make a cardboard template 12" long and to width to match the width of the pockets. Then cut the felt with an X-Acto knife to match the template, see Fig. 24.

Next, I sprayed one side of the felt with 3-M Spray Mount (from an art supply store), let it dry until it was tacky, and then pressed it down into the pockets. Start at one end, work over the center ridge, down into the other pocket, and out the other end.

Finally, trim the ends with an X-Acto knife, see Fig. 25. (I didn't line the sides so the veneer is exposed on the inside.)

FIGURE 20

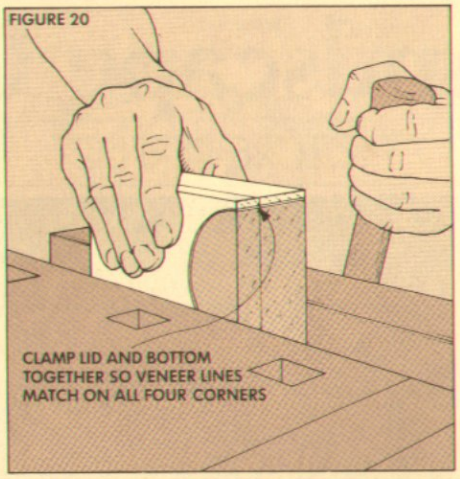

FIGURE 21

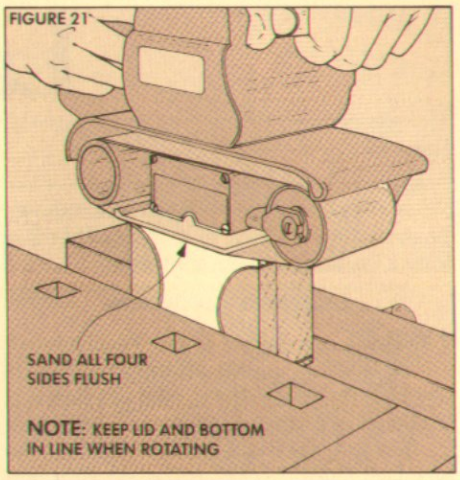

FIGURE 22

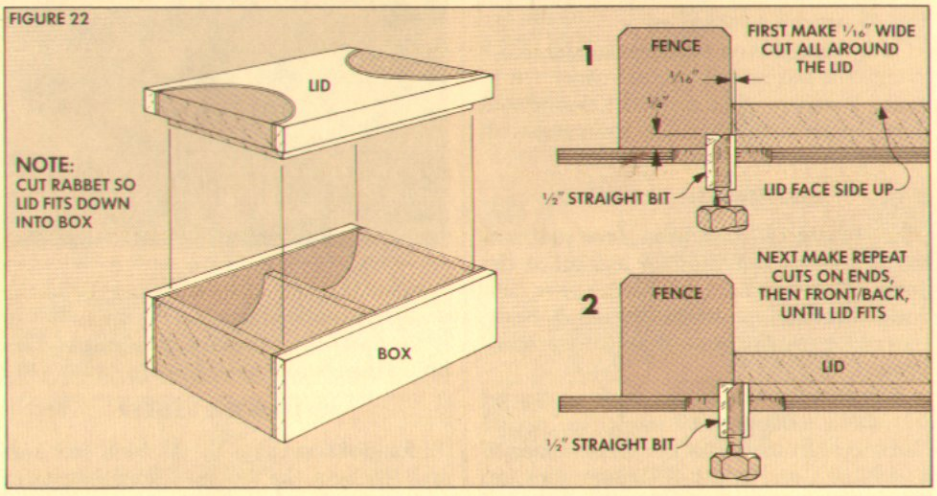

FIGURE 23

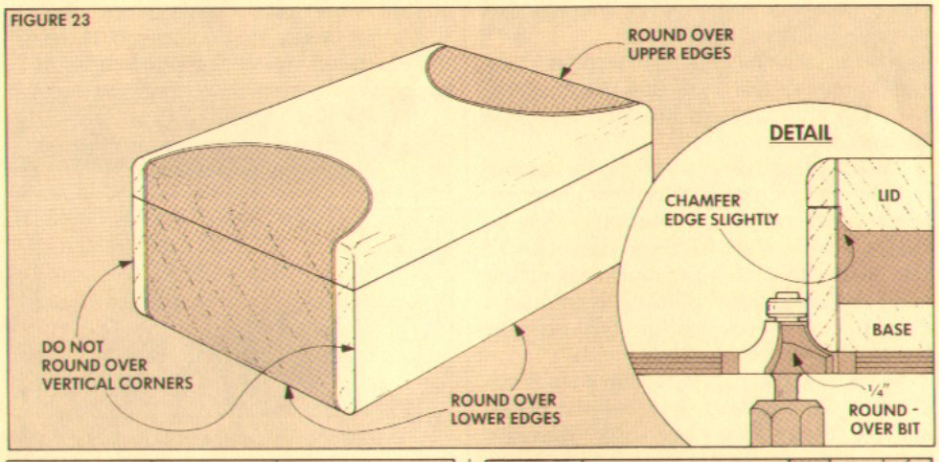

FIGURE 24

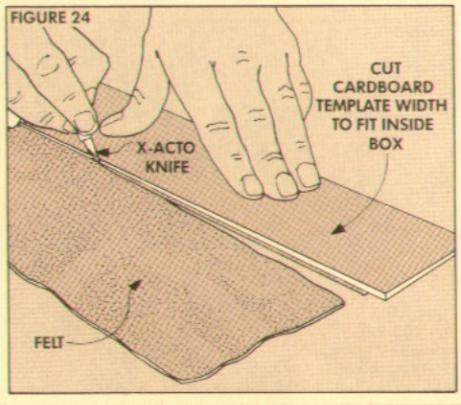

FIGURE 25

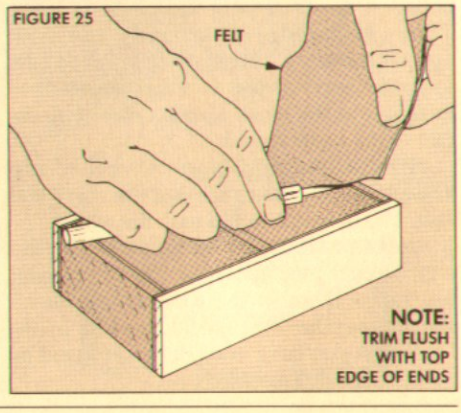

Landscape Lid

PICTURE PERFECT

After completing the band saw boxes shown on page 10, I decided to make another box with a landscape design for the lid.

DRAWING THE DESIGN

The landscape design is cut freehand, but we've included a grid drawing for the lid shown in the photo. If you want to follow this design, there are a couple ways to approach it. You can draw the design right on the wood, or draw it on 1" grid paper first and then transfer it to the wood.

If the design is on paper, you can transfer it onto the box lid with carbon paper. Or, to make it easier, photocopy the design and glue the photocopy right to the wood with rubber cement or 3M Spray Mount.

CUTTING THE DESIGN

The lid design is made from three contrasting woods stacked together and cut at the same time. The lid in the photo uses zebrawood for the mountain and clouds (top), cherry for the sun, and maple for the background.

CUT OUT STOCK. Begin work on the lid by cutting a blank of 4/4 stock (13/16" actual thickness) from each of the three woods to a width of 5" and length of 7". Then stick the three pieces together with double-sided carpet tape, see Fig. 2.

Now attach the paper pattern (or draw the design) on the top board. Next, check to be sure that the band saw table is *exactly* 90° to the blade.

START AND STOP POINTS. When cutting out the design, the only critical measurements are the start and stop points. The lid design should start 1/4" from the edges of the boards to match the thickness of the front and back pieces. (This will produce a clean line on the ends of the box, refer to the End View in Fig. 13.)

To mark these points, set up a rip fence 1/4" from the *inside* of the band saw blade, see Fig. 3. (I slid a piece of 1/4" Masonite between the fence and the blade to test.) Then with the edge of the three-board block against the fence, score (about 1/16" deep) the four start and stop points on the design. (You have to flip the block upside down to make two of the score lines.)

CUT OUT DESIGN. Then remove the fence and cut out the design using the start and stop points to enter and exit the wood.

REARRANGE THE PIECES. Once the design is cut, pull apart all the pieces and rearrange them so the contrasting woods are put together into one lid, see Fig. 5. (At this point you have enough material cut to make three different lids.)

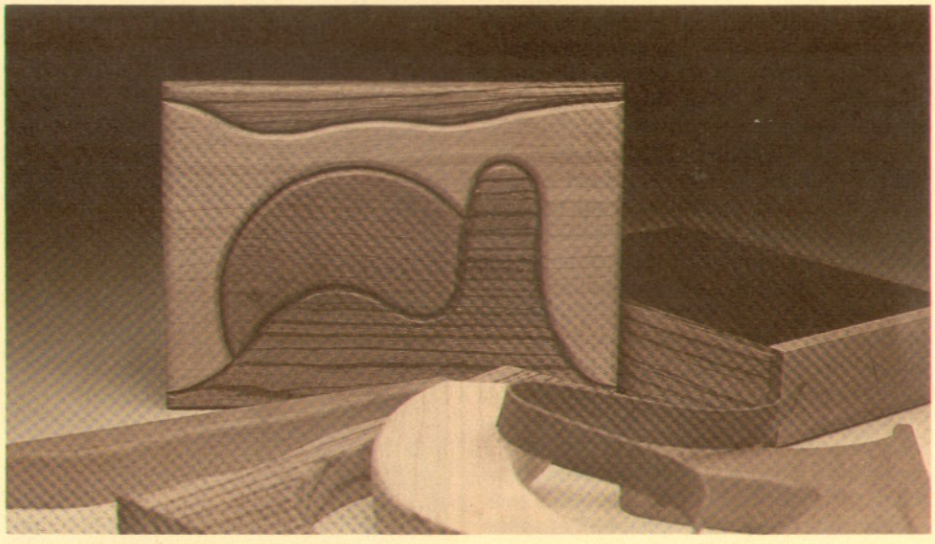

ROUND OVER EDGES. To highlight the design, I rounded over all the upper edges of the band saw cuts with an 1/8" round-over bit on the router table, see Fig. 5.

FITTING THE VENEER

To fill in the void left by the band saw kerf and highlight the design, I added strips of walnut veneer between the pieces.

For the design shown here, cut three 1/2"-wide strips of veneer to rough lengths of 7", 8", and 13". (Note: While the saw was set up, I cut some extra strips in case some broke, and also a couple 1 3/4" x 7" veneer strips needed later for the front and back of the box, refer to Fig. 13.)

BENDING VENEER. To bend the veneer, soak it under a stream of hot water for a couple minutes until the fibers start to soften. As the fibers soften, bend the veneer into a semi-circular shape under the stream of water, see Fig. 6.

FIGURE 1

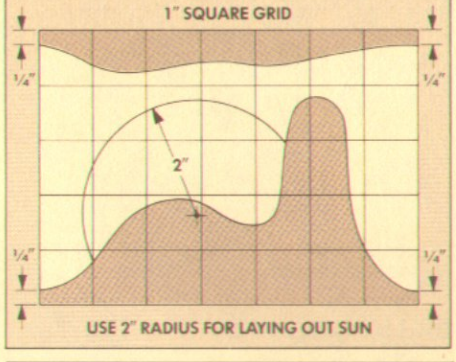

FIGURE 2

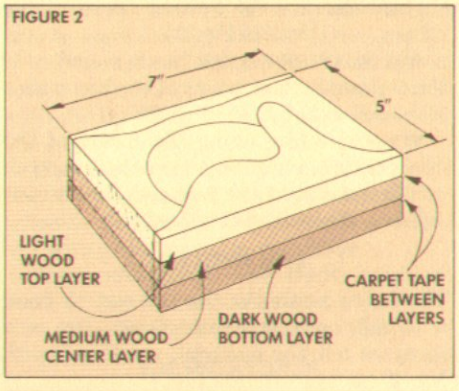

FIGURE 3

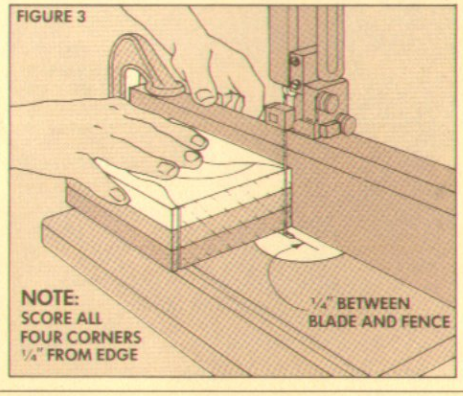

FIGURE 4

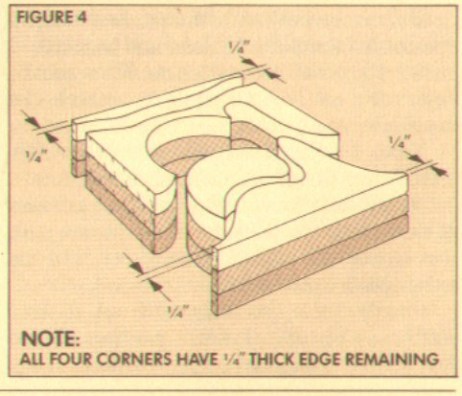

Once the veneer is pliable, use one of the bandsawn lid pieces as a mold and gently ease the veneer over the curve, see Fig. 7. Slowly work the veneer with your thumbs a little bit at a time.

After the wet veneer strip is roughly in the desired shape, place it between the lid pieces and add shims to take up the space of the other curved veneer strip. Now clamp (but don't glue) the lid pieces together, see Fig. 8. (Note: Only try to bend one strip of veneer at a time.)

Note: Since I originally cut three boards to identical shapes, I saved time by clamping the two shorter pieces of veneer inside the *other* two sets of lid pieces.

After the veneer dries overnight (you can speed up the process with a hair dryer), pull the pieces apart and the veneer will hold its approximate shape, see Fig. 9.

GLUE IN VENEER. Now, glue the veneer strips in place. Start with the top strip. (Clamp with the bottom lid piece in place to make clamping easier, see Fig. 10.) After the glue dries, clamp and glue in the strip that fits over the sun, see Fig. 11.

Next trim off the excess veneer and clamp and glue in the last strip, see Fig. 12. Once the glue dries, trim all the veneer flush with the outside of the lid.

BOX BOTTOM

While I was in the mood for trying new things, I made a slightly different box bottom for this landscape lid.

MAKE THE BLANK. Start building the bottom by cutting a piece of 8/4 stock to a rough width of 5½" and length of 8". (Or, glue two pieces of 4/4 stock face to face.)

Then this blank has to be cut to size to match the lid. To determine the finished width of the blank use measurements taken from the *end* of the landscape lid. Measure the distance from the *inside* of one piece of veneer to the *inside* of the other, see Fig. 13. Now cut the blank to width so it matches this measurement and to length to match the overall length of the lid.

BAND SAW THE DESIGN. Once the blank is cut, lay out the bottom profile on the front of the blank, see Detail in Fig. 13. Then band saw the bottom to shape.

ADD FRONT AND BACK. Next glue on the 1¾"-wide veneer strips (cut previously). Then add the ¼"-thick front/back pieces. For these pieces, I used the same wood as the clouds and mountain, see Fig. 13.

FINISHING TOUCHES. After the front and back are glued in place, clamp the landscape lid to the bottom and sand the four sides flush. Then rout a ¼"-deep rabbet on all four edges of the lid so it fits in the bottom, see End View in Fig. 13. (See page 13 for an explanation on how to do this.) Finally round over the top of the lid and bottom of the box with a ¼" round-over bit.

I finished the box with two coats of tung oil and applied felt to the inside.

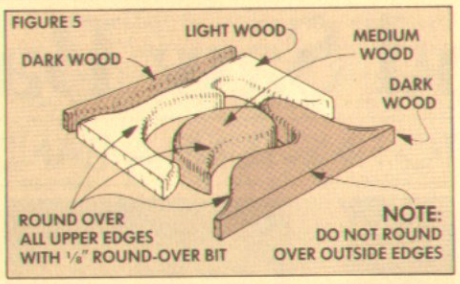

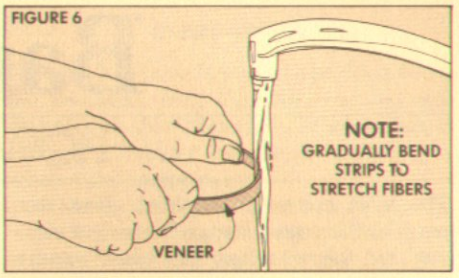

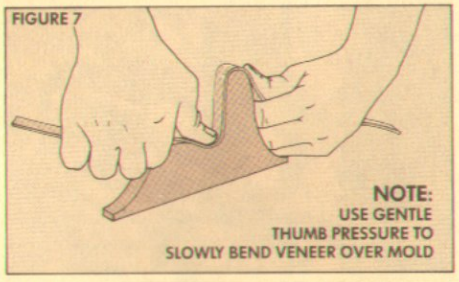

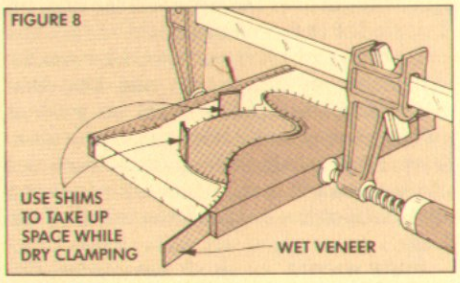

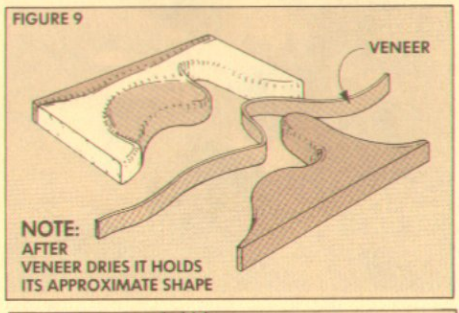

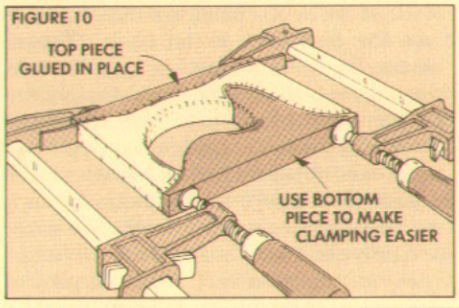

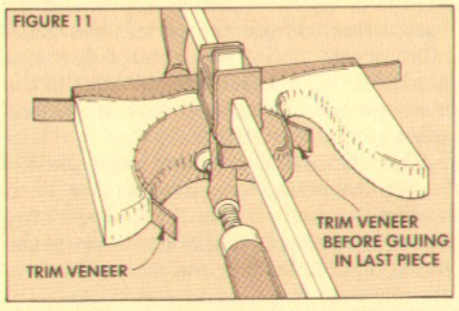

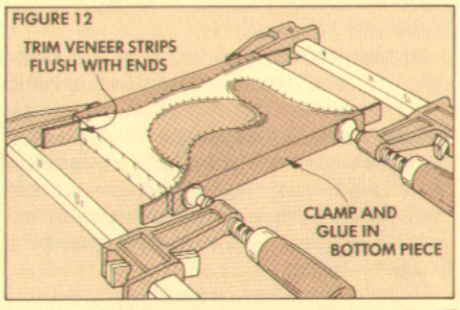

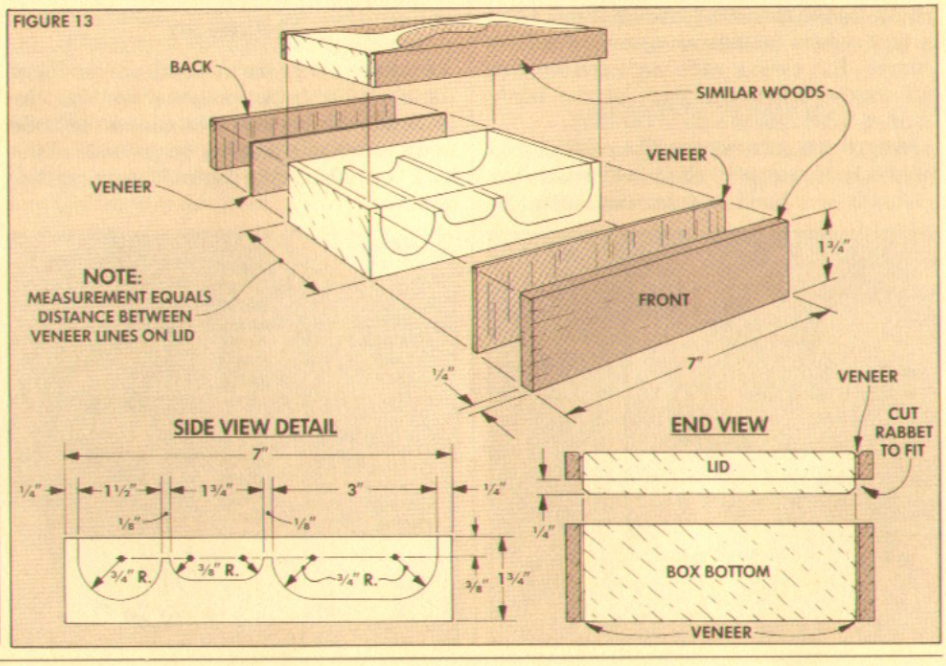

Band Saw Basics

HOW TO FINE-TUNE A BAND SAW

The most common complaint about band saws is: "You can never get a straight cut — one that follows a line. The blade wanders and drifts all over the place and the final cut is angled or barrel-shaped."

It's true that band saws are notorious for wandering off course. It's also true that everything that makes them so good at cutting curves is also what causes the problems. The key to both the good and bad sides of a band saw is in the relationship between the width of the kerf and the width of the blade.

KERF WIDTH. As on all saw blades, the width of the kerf a band saw cuts is wider than the *thickness* of the blade. This is because the teeth are "set" or bent outward from the centerline of the blade. Setting the teeth makes the blade cut a kerf with clearance on both sides for the blade.

The most obvious effect of this clearance is to keep the blade from binding. But on a band saw there's a second benefit. The clearance provides room for the blade to change direction in its own kerf. How sharply the blade can change direction depends on the *width* of the blade.

BLADE WIDTH. The width of the blade (the distance from the teeth to the back) determines how far the blade can swing before the back bumps into the side of the kerf. On a narrow blade, the blade can turn at a very sharp angle (to make a tight radius). But, on a wide blade this swing angle is small (to make a wide, sweeping radius), see Fig. 1.

This is the reason a wide blade is the best choice for making straight cuts or following a line when making a series of gentle curves. But even a wide blade can wander off course when the back of the blade swings from side to side in the kerf.

WIDTH RELATIONSHIP. The relationship of the kerf width to the blade width explains how a band saw can cut curves so

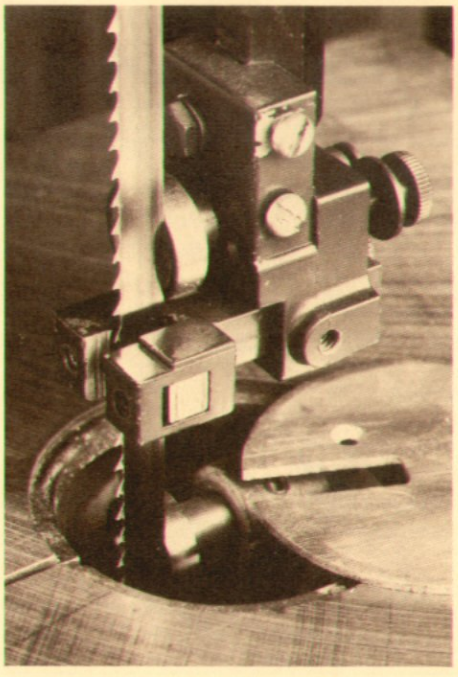

easily. But it's also the reason the blade often resists cutting straight or following a guide line. This is because the back of the blade swings from side to side in the kerf when you don't want it to.

There are four factors that can make this natural tendency to wander worse: 1) an uneven set on the teeth, 2) improper setup of the band saw, 3) too little tension on the blade, and 4) feeding the workpiece into the blade too fast.

UNEVEN SET

An uneven set means the teeth on one side of the blade are bent outward more than the teeth on the other side. This causes the blade to cut more aggressively on one side of the kerf, which leads the blade off course in that direction.

There is no cure for an uneven set; you just have to compensate for it (see Box on resawing on page 18). Or, buy a new blade. (Even though a new blade won't have a *perfect* set, it's easier to compensate for a slight lead than a strong one.)

MAINTAIN SET. The best way to maintain the original blade set is to prevent what makes it uneven. In normal use, both sides of the blade will wear evenly. What usually throws it off is running into a hard object.

HARD OBJECTS. When the blade runs into a hidden nail or screw, the set of the teeth will be ruined immediately. But the hard objects that most often ruin the set are the hardened blade guides on the band saw itself. The only way to keep the teeth from rubbing on these guides is to carefully set up the band saw each time a blade is installed or changed.

BAND SAW SETUP

Setting up a band saw requires three basic procedures. The first is getting the blade to track properly (stay in the same relative position as it goes around the wheels). The second is setting the blade tension. And the third is adjusting the blade guides and thrust bearings to keep the tensioned blade aligned so it stays on track when a piece of wood is fed into it.

WHEEL ALIGNMENT. The wheels have to be in line with one another or the blade won't know which wheel to follow.

"Misaligned wheels put an unpredictable stress on the blade," warns Mark Duginske, a cabinetmaker who is currently writing a book about band saws. "Imagine trying to ride a bike with the wheels out of line and out of parallel. One or both of the bike wheels will bind. The same is true with the band saw wheels."

ALIGN WHEELS. To align the wheels, first loosen the setscrew that holds the lower wheel in position on the arbor. Next,

FIGURE 1

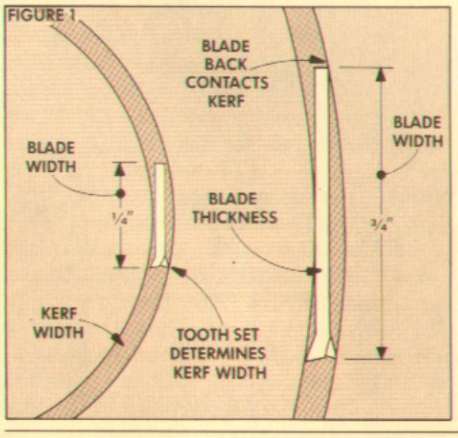

FIGURE 2

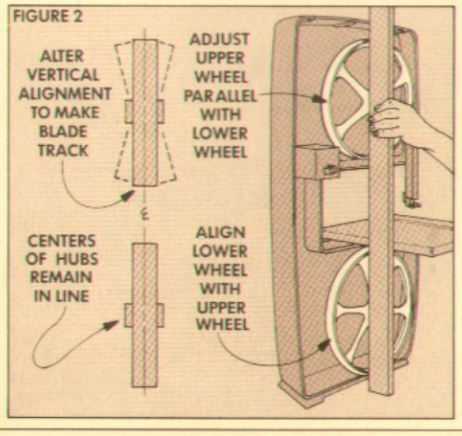

FIGURE 3

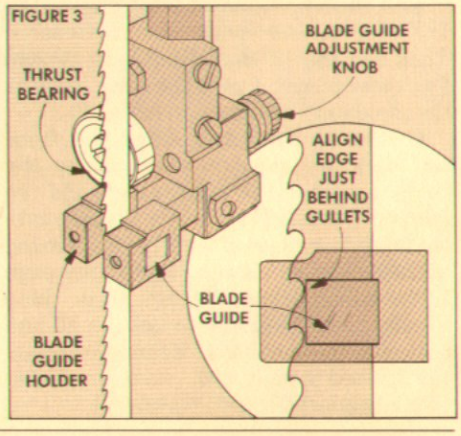

adjust the angle of the top wheel (by turning the tracking adjustment screw or knob) until the top wheel is parallel with the lower wheel. Then hold a long straightedge across both edges of both wheels and slide the lower wheel on its shaft until it lines up with the top wheel, see Fig. 2.

Note: When adjusting for alignment, hold the straightedge as close to the middle of the wheels as possible. (To do this on my Sears saw, I had to slightly bend the light bracket out of the way.)

SET TRACKING. After the wheels are aligned, set the tracking. To do this, begin by installing the blade. Next, increase the blade tension until the blade is stretched tight between the wheels. (Final tension adjustments will be made later.) Then, slowly turn the wheels by hand and watch to see if the blade drifts toward the front or rear edge of the wheels.

To correct the drift, turn the tracking adjustment screw (that alters the vertical alignment of the top wheel) until the blade stays in the same relative position on the wheels for several revolutions, see Fig. 2.

BLADE TENSION

Before adjusting the blade guides and thrust bearings that keep the blade on track when cutting, the blade has to be tensioned. Even a new, sharp blade will lead or create a barrel-shaped cut if it's not stretched tightly between the wheels.

HOW MUCH TENSION? Most band saws have a tension gauge, which really just indicates an approximate tension setting. The movement of the gauge is based on the amount of pressure on a compression spring. Sometimes the spring has fatigued to the point where the gauge is no longer accurate. On many band saws the gauge wasn't accurate to start with.

Usually the tension on the blade has to be greater than the gauge indicates. When I put an ⅛" blade on my Sears band saw, for example, and tension it correctly, the gauge reads as though it would be correct for a ⅜" blade.

HOW TO TENSION. To correctly tension a band saw blade, first back off all the upper and lower blade guides and thrust bearings. Now start to increase the tension on the blade and occasionally "pluck" the blade and listen to the sound. It should be crisp and clear like a violin, not a dull bass note.

Note: While increasing the tension, occasionally spin the wheels to see if the blade is still tracking correctly. Increasing the tension may make it necessary to make minor adjustments to the angle of the upper wheel.

A lot of this comes from trial and error. Although the tension gauge may be a good starting point, it's just that — a starting point.

TOO MUCH TENSION. It is possible to over-tension a band saw. If there's too much tension on a revolving wheel shaft, the shaft may bend or even break. Also, the blade may become too sensitive and stiff and the saw may moan as it runs. Though over-tensioning can be a problem, my experience is that more people tend to under-tension than over-tension their band saws.

GUIDES AND BEARINGS

After the blade is tracking straight and tensioned, the blade guides and thrust bearings that keep it in position are adjusted. The main thing to keep in mind here is that if the teeth of the blade contact the guides, the set will be destroyed instantly. So begin adjustment by positioning the thrust bearings.

THRUST BEARINGS. The job of the thrust bearings is to keep cutting pressure from pushing the teeth back between the guides (which would destroy the set). To adjust the thrust bearings, move them forward until they lightly touch the back of the blade when very slight pressure is applied to the blade. Then tighten the setscrews that lock them in place.

GUIDE POSITION. After setting the thrust bearings, the side guides should be positioned so the front edge of each guide is just (1/32") behind the gullets of the teeth, see Fig. 3. Then slide the guides inward until there's just enough clearance for a thickness of notebook paper on each side and tighten the setscrews.

BLADE STRESS

Now the band saw is set up to perform to it's full potential. But, this full potential still may be a bit short of perfect. When a blade is cutting, it's under two kinds of stress — tension and compression.

TENSION AND COMPRESSION. When the blade is first tensioned on the wheels, the tension forces are the same on the front edge (where the teeth are) and the back edge of the blade, see Detail 1, Fig. 4.

Once a piece of wood is pressed into the blade, the back of the blade remains under tension, but the front of the blade tends to compress. Compression at the front makes the front buckle or bow to one side or the other, see Detail 2, Fig. 4. This makes the back of the blade angle to one side of the kerf, which makes the blade wander off on its own course.

BARREL CUT. In addition to the cut drifting off to one side, the blade might leave a "barrel" cut, see Fig. 5. It's hard to tell if you're getting a barrel cut until you're finished. On the surface of the wood, the cut may seem straight (though it might be hard to follow a line). If the blade is bowing, you could end up with a barrel-shaped cut on the inside of the workpiece.

THREE SOLUTIONS. There are three solutions to these problems. First, use a wider blade. When you push wood into a wider blade, it's less likely to flex backward and create the tension/compression differences that cause the blade to bow to the side.

Second, it's a good idea to keep the top blade guide as close to the wood as possible. If the guide is right over the surface, the blade can't bow as much, see Fig. 6.

Finally, increase the tension on the blade. If the tension on the entire length of the blade is greater, the whole blade is more rigid and the front of the blade is not as likely to compress as far when wood is pressed into it.

REDUCING VIBRATION

In addition to tuning up a band saw, it also pays to settle it down. This means reducing vibration to a minimum.

FIGURE 4

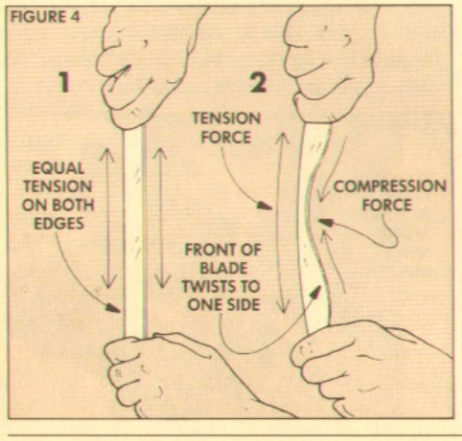

FIGURE 5

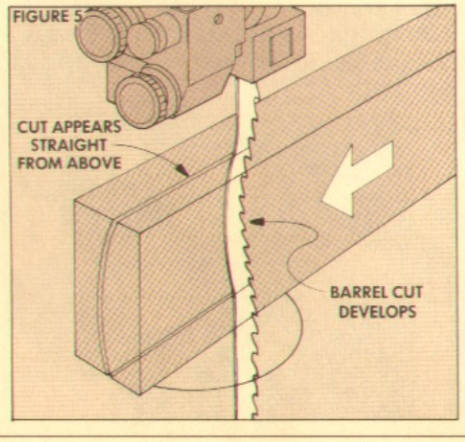

FIGURE 6

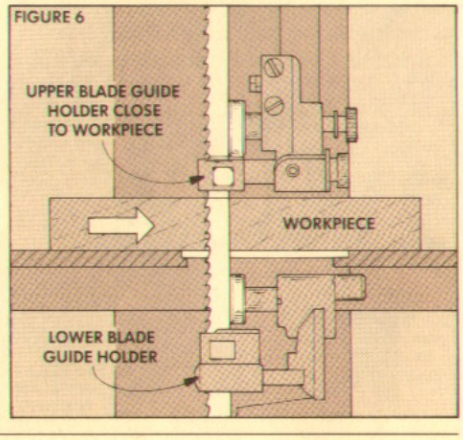

Recently I visited a woodworking show where a representative from Inca Machinery was demonstrating how vibration-free his band saw was by setting a nickel on edge on the band saw table and turning on the saw. Of course, the nickel didn't fall over. When I got home from the show, I gave that a try on my Sears 12-inch band saw and the nickel practically leaped off the table.

It was at that point I realized that if the saw was vibrating so much, it was difficult to hold the wood on top of it steady enough for a smooth cut. So I began looking for ways to dampen the vibration.

ELIMINATE FLEX. One problem with many band saws is the way they're fastened to the base. On the Sears saw there are two flanges on the bottom of the saw that are bolted to flexible sheet steel cross-pieces on the leg set. By cutting a piece of ¾" plywood to fit between the saw and the leg set, I was able to reduce some of the flexing, see Fig. 7.

STRENGTHEN LEGS. Another problem is with the legs themselves. They're spindly. Most band saws look like a giraffe trying to navigate speed bumps. These spindly legs amplify vibration.

To solve this problem, I cut some 2x4's and mounted them as cross-members between the legs. (Note: The newer model Sears saws have steel cross-members, but the old ones don't.) Then I screwed a piece of ¾" plywood down to the top of the 2x4's and to further dampen the vibration added a bag of sand for weight.

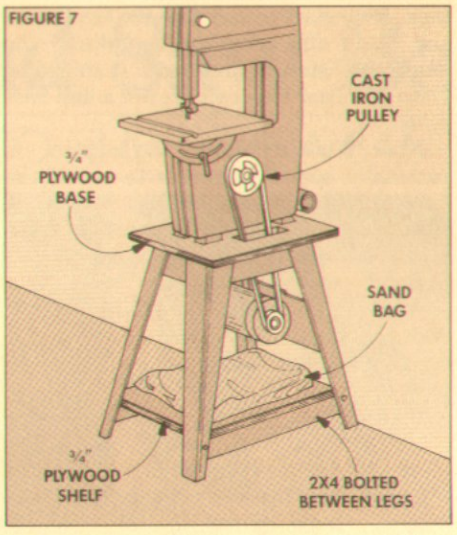

CAST IRON PULLEYS. There's one final change I made on the saw to kill vibration. I spent about $15 and bought heavy cast iron pulleys to replace the light ones that came with my saw. The fact that they're turned perfectly round makes these pulleys run smoother.

ALIGN THE PULLEYS. When I put the new pulleys on, I made sure they were aligned with one another so the belt would run true (and wouldn't become another source of vibration). To do this, hold a straightedge alongside the pulleys. When the pulleys are in perfect alignment, the straightedge should touch *both* outside edges of *both* pulleys.

FEED RATE

Getting a band saw properly tensioned, correctly aligned, and as vibration-free as possible is only half of what it takes to make cuts that don't wander. The other half is developing a cutting technique.

SLOW DOWN. If you feed wood too slowly through a *table* saw, the wood may burn. So there's a tendency to feed at a pretty good clip. But just the opposite is true on a band saw. You can even stop feeding on a band saw without fear of burning the wood.

When working with thick, hard stock or when resawing wider stock, I consciously feed the wood as slowly and steadily as I can and still hear cutting going on.

When the workpiece is fed too fast into a band saw blade, you're not allowing the blade to do its job. The teeth aren't cutting and clearing the chips out and the blade will flex and create a barrel cut. A slow feed rate allows the blade to clear out all the chips and gives a cleaner, straighter cut.

A STEADY CUT

There's one final thing I consider before making a cut. Where will my hands be before, during, and after the cut? If you have to stop feeding often and readjust your hand or body position, the blade will leave a notch or a ragged cut. The smoothest, straightest band saw cuts come when there's a slow, but steady feed from the begining to the end of the cut — one that's planned out before even turning on the motor.

RESAWING...*How To Eliminate Drift*

Resawing is one of the most important jobs on my band saw. (Resawing is ripping a board on edge to get two thinner pieces.) But it's the one operation that can cause the most aggravation. If a blade is going to lead or drift to one side, resawing will do it.

BLADE PROBLEMS. There's a tendency to think that the drifting is peculiar to a specific piece of wood. Instead, it's usually a problem with the blade. The blade may not be sharp, or the teeth on one side might not have as much "set" (outward bend) as on the other side. Just about any blade, even a new one, may tend to lead.

A SOLUTION. To solve the problem, I first try to determine which way the blade is leading. To do this, draw a cut line on the edge of a piece of scrap with a marking gauge or a pencil and combination square. Then stand the piece on edge and start to resaw along the cut line without using a fence. If the blade is leading, it will tend to drift to the right or left of the pencil line, see Top View in Fig. 1.

To compensate for the drift, swing the tail end of the workpiece toward the direction of the drift and keep pushing forward, see Fig. 1. Once the cut follows the pencil line for a couple inches, turn off the saw, but hold the workpiece at the new angle. This is the "drift angle" of this particular saw blade.

READJUST THE FENCE. Now draw a pencil line across the saw table along the bottom edge of the workpiece to mark the drift angle, see Fig. 2. Then pull the workpiece off the blade and C-clamp a high fence down on the line, see Fig. 3.

Next, try cutting another piece of scrap at this new "drift angle." Even though the fence is at an angle to the blade, it should cut straight along the line.

The important thing here is that you find the correct angle, clamp down the fence, and stay with it. Once the angle is determined, you should be able to resaw a straight line without "whipping" the workpiece right and left through the cut.

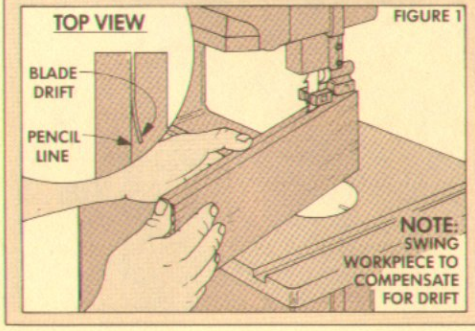

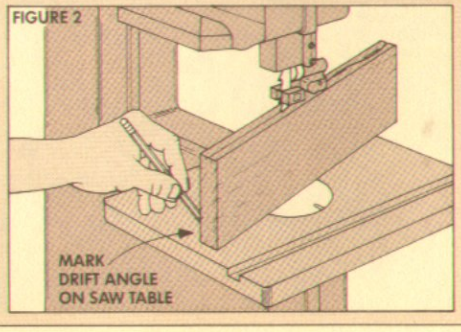

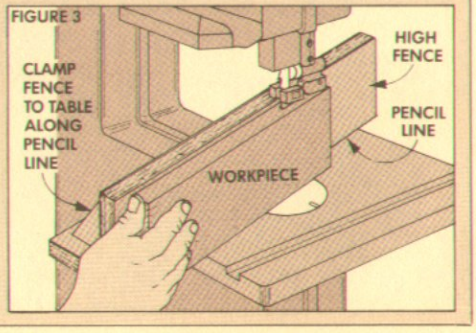

Band Saw Circle Jig

You can cut circles on a band saw by simply driving a nail into a piece of plywood and using it as a pivot point. Or, you can build an adjustable circle jig. The jig shown here is adjustable for different size circles and it's held to the table with turnbuckles instead of clamps.

THE BASE. To build the jig, start by cutting a base of ¾" plywood, 24" long and 2" wider than the side (depth) of your band saw table, see Fig. 2.

TONGUE. To form the sliding tongue that holds the pivot nail, bevel rip a section out of the center of the base, see Fig. 2.

BACKBOARD. The outside two sections are joined back together with a ¾" plywood backboard, see Fig. 2. To determine the length of the backboard, lay the two outside sections together upside down with the sliding tongue in place, and measure across all three pieces.

Next, to determine the width of the backboard, measure across the front of your saw table and add 1½". Then lay out a line across the three pieces using this measurement, and cut the backboard to width so it fits on this line, see Fig. 2.

After the backboard is cut, screw it to the bottom of the jig with the sliding tongue in place.

STOP SYSTEM. The sliding tongue is held in the correct position (depending on the radius to be cut) with a thumb screw mounted in a threaded insert, see Fig. 1.

To install the insert, drill a counterbored hole into the backboard, centered and near the end of the tongue slot. Then install the insert and thumb screw. (Put a penny in the counterbore to diffuse the pressure of the thumb screw.)

PIVOT NAIL. Next, drill a small hole near the end of the sliding tongue, snip a 3d nail in half, and push it into the hole as a pivot nail, see Fig. 1.

BLOCKS. The jig is held to the table with two turnbuckles and blocks. To make the blocks, cut two pieces 1½" wide and slightly less in thickness than the saw table.

To locate the blocks, clamp the jig to the table with the backboard tight against the outside (right) edge and the blade centered on the tongue opening, see Fig. 3. Now glue and clamp the blocks tight against the inside (left) edge of the table.

TURNBUCKLES. To mount the jig to the table, drill two counterbored shank holes for carriage bolts, see Fig. 4. Then make two turnbuckles to fit onto the bolts, and use wing nuts to tighten down the turnbuckles, see Fig. 5.

ALIGNMENT. To align the jig for use, "clamp" it down so the pivot nail aligns with the front of the saw blade's teeth.

FIGURE 1

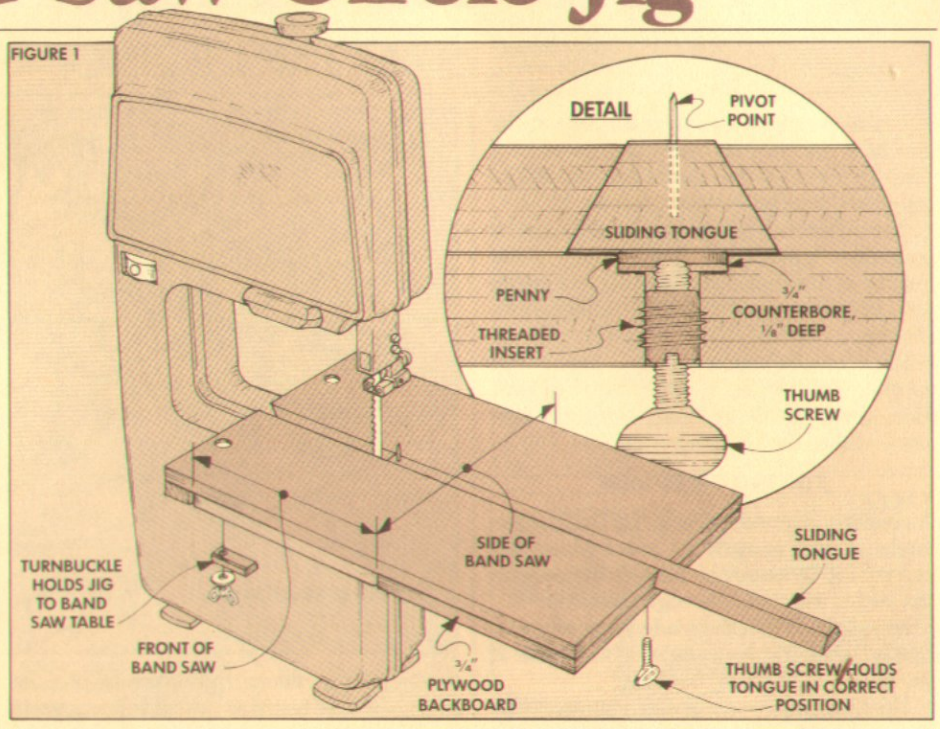

FIGURE 2

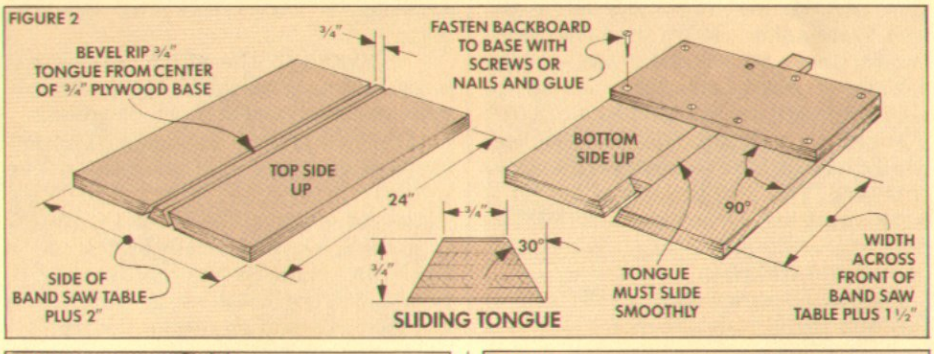

FIGURE 3

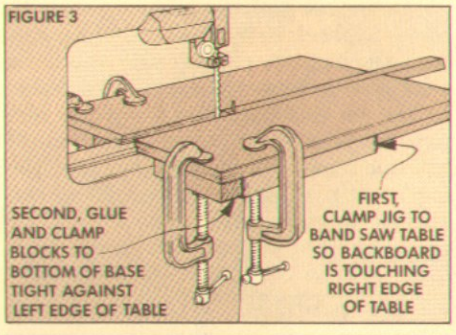

FIGURE 4

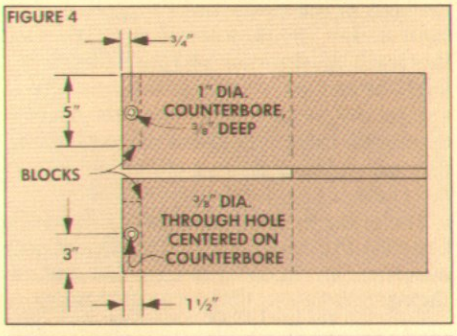

FIGURE 5

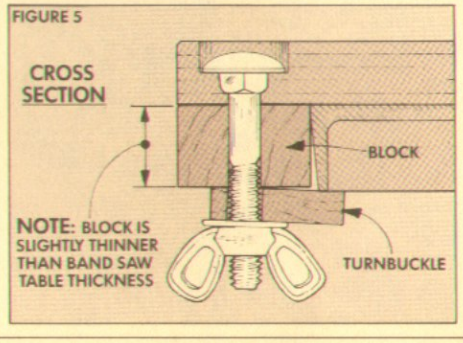

FIGURE 6

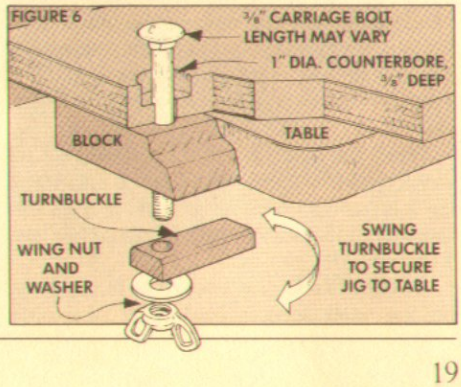

Table Saw Adjustments

NO MORE ZING

If you've ever heard a saw blade *zing* at the end of a cut, you've heard the sound of a blade that's not aligned. And you can see the rough and burned surface it leaves.

The difference between a good cut and a poor one depends on two things: 1) the quality of the blade that's mounted in the saw, and 2) how well that blade is aligned for cutting.

Blade misalignment is very common, but rarely identified for the trouble it causes. More often, the blade itself — or the whole saw — takes the blame.

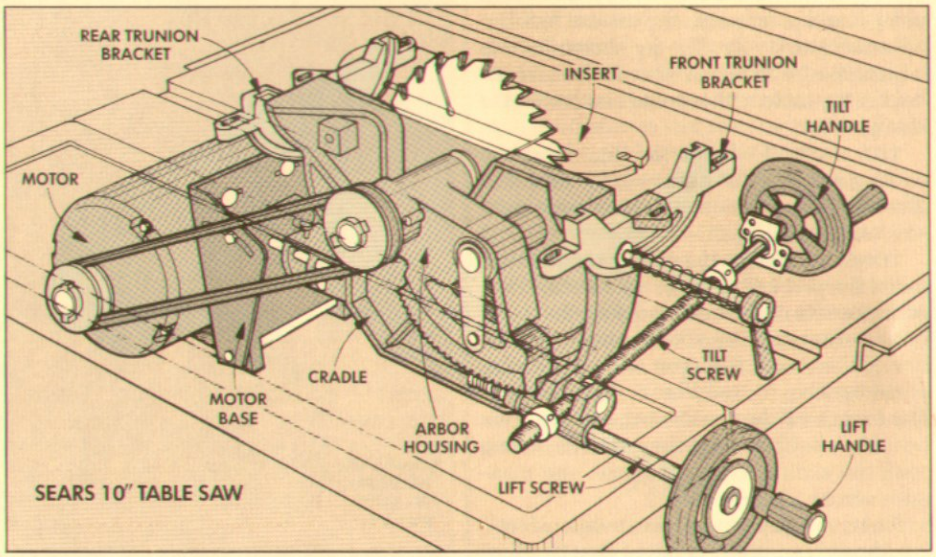

STAYING ON COURSE

A properly aligned blade is one that's absolutely parallel to both the miter gauge slot and the rip fence so the blade is in line with the kerf it will make through the wood.

HEELING. When the blade is not aligned, that is, when it's at an angle to the course of the kerf, the blade is "heeling."

Heeling gets its name from nautical jargon. The rear part of a ship's keel is the heel. When a ship is blown across the water in a line that's not parallel to the keel, it's heeling. A blade heels when it's out of alignment with the path of the cut.

SOUND OF HEELING. The *zing* you hear when cross-cutting a workpiece is the sound of heeling. This *zing* happens as the cut is being completed. What happens is this. The front edge of the blade makes the initial cut (kerf) in the workpiece.

Then as the workpiece clears the teeth at the front of the blade and moves alongside the body of the blade, there's a period of no contact. But as the workpiece moves past the teeth at the rear of the blade, there might be contact — and the *zing* sound.

If there's contact, it's because the blade is misaligned (it's heeling) and the teeth at the rear are rubbing against either the left or right side of the kerf.

The effect heeling has depends on which direction the blade is out of alignment and whether the wood is being cross-cut or ripped.

CROSS-CUT HEELING. If the blade is out of alignment so the rear of the blade is to the *left*, the blade rubs on the finished end of the workpiece during cross-cutting. This results in the cut end being rough or burned, see Fig. 1.

When the blade is out of alignment to the *right*, the effect of heeling is not as important (to a cross-cut) because the blade does the damage to the waste piece being cut off, see Fig. 2.

Besides producing a rough or burned end on the workpiece, a blade that heels can actually exert enough pressure to push or pull the entire board as the cut is being made — making an angled cut when it should be straight.

RIP HEELING. The effect heeling has when ripping a workpiece is significantly more apparent, and at times, dangerous.

If the rear of the blade is angled toward the rip fence (to the right), the wood will be squeezed between the fence and the blade as the cut is made. This results in the cut edge being torn and usually burned as the teeth rub against the cut edge, see Fig. 3. In addition, the motor has to work harder and the blade may overheat and warp.

The biggest problem, however, is that a blade that heels to the right can be dangerous. During the ripping operation the workpiece is squeezed against the fence. As the cut continues, the workpiece contacts the teeth at the rear on their *upward path* and tends to be lifted off the table. The combination of squeezing and lifting the workpiece results in kickback.

If the rear of the blade heels *away* from the fence (to the left), there is a different set of problems. The teeth press against the waste side of the workpiece. This pulls the workpiece away from the fence and results in a tapered cut, see Fig. 4.

ELIMINATE HEELING

Fortunately, heeling is easy to cure. The trick is to move the trunion so the blade is parallel with the miter gauge slot. The trunion is the assembly that holds the saw arbor (or the motor itself on direct-drive saws) to the bottom of the table.

FEELER GAUGE. To get the trunion and blade aligned, you have to measure the distance between the miter gauge slot and the blade at both the front and rear. To do this, I use a micro-adjustable feeler gauge.

This gauge is a small block of wood attached to a runner (that slides in the miter gauge slot). At the end of the block, there's a round-head brass screw that allows the microadjustments, see Fig. 5.

FIGURE 1

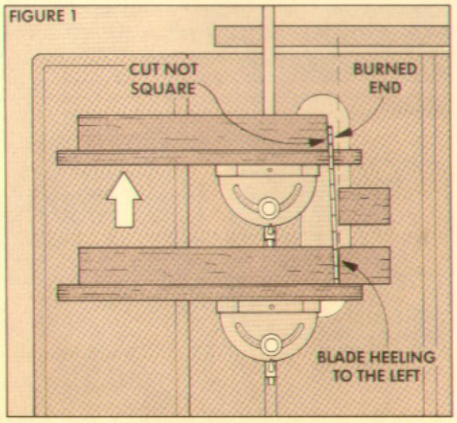

FIGURE 2

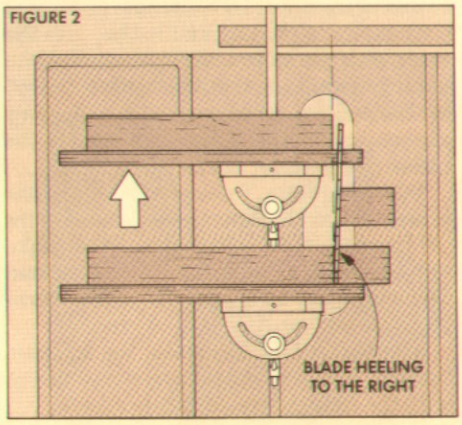

REFERENCE TOOTH. All measurements are made to the same tooth on the blade. (I color a single tooth with a felt-tip pen.) Then I place the feeler gauge in the left miter gauge slot. (Since I'm right-handed, the left miter gauge slot gets used the most. So I use it to align the trunion.)

Now raise the blade to full height and rotate it so the marked tooth is just above the table surface at the front of the table. Then adjust the depth of the screw so the head just touches the tooth, see Detail, Fig. 5. Rotate the blade back and forth until you hear a slight *ding* as the tooth grazes the screw head.

Now rotate the blade so the marked tooth is at the rear, and slide the gauge back so the screw head aligns with the marked tooth again. Any gap or binding will indicate how much the blade is out of line, see Fig. 6.

ALIGN BLADE. To align the blade, loosen the bolts that secure the trunion to the bottom of the saw table, see Fig. 7. Then tap the rear of the trunion in the direction needed, see Fig. 8.

You can judge the alignment by the sound of the *ding* made when the marked tooth brushes the tip of the brass screw head. The *ding* should have the same pitch at both the front and back. Then tighten the trunion bolts and make the test again (just in case the trunion slipped as the bolts were being tightened).

ALIGN RIP FENCE

At this point, the blade is aligned with the miter gauge slot — for cross-cutting. The next step is to align the rip fence to the slot — for ripping. To align the rip fence, first loosen the bolts on top of the fence locking mechanism, see Fig. 9.

USE LEFT SLOT. One thing to keep in mind when aligning the fence with a miter gauge slot is that the left and right slots may not be exactly parallel. For this reason, align the edge of the fence on the edge of the *left* slot (the same slot used to align the trunion). Then retighten the bolts.

SHORT SUPPORT. On some saws (including Sears) the rail that supports the fence on the front of the saw table is so short the fence can't be moved to line up with the left slot. In this case I use the feeler gauge to align the fence.

To do this, loosen the bolts and position the fence so it's just touching the brass screw head on the end of the feeler gauge, see Fig. 10. Next, slide the gauge to the rear of the table and adjust the rear of the fence until it just touches the screw head. When the contact is the same at both front and rear, retighten the bolts on the fence to lock it parallel to the left slot.

Fine tuning a saw to eliminate heeling has to be done occasionally. If you're getting rough or burned cuts, or if the cuts are out of square, keep that feeler gauge around to check for heeling.

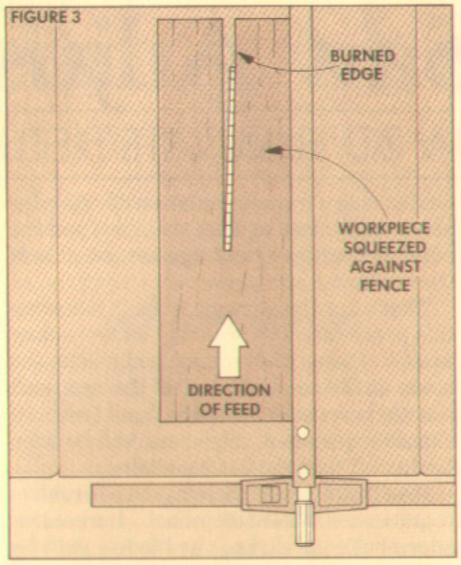

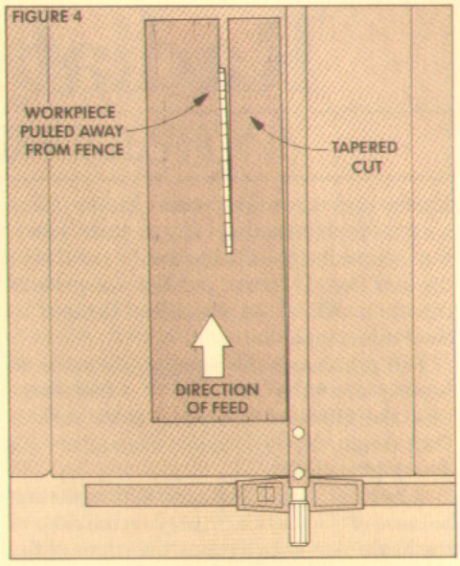

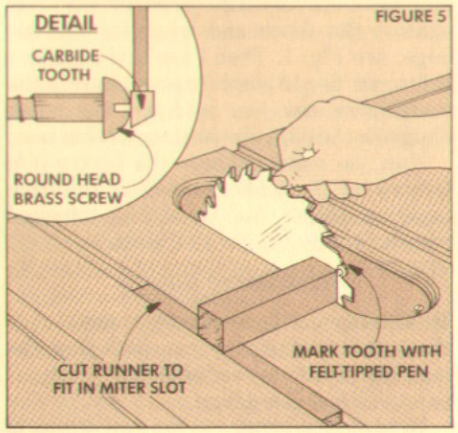

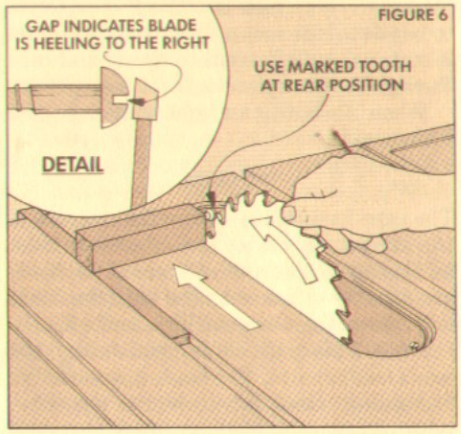

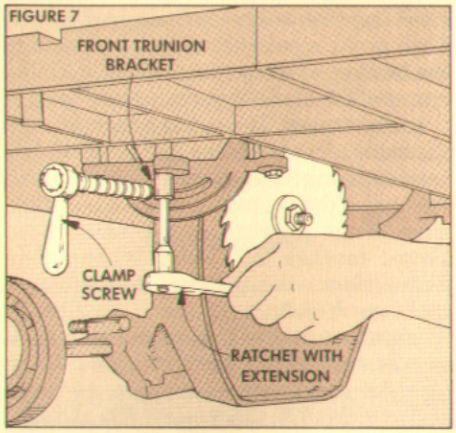

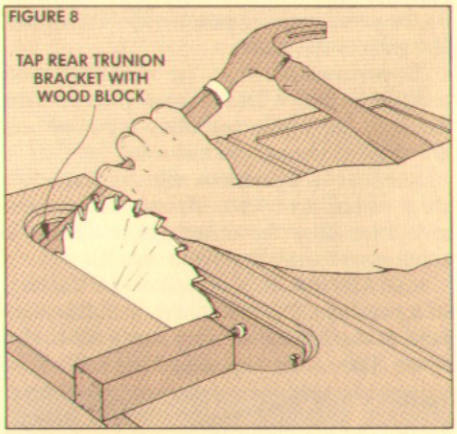

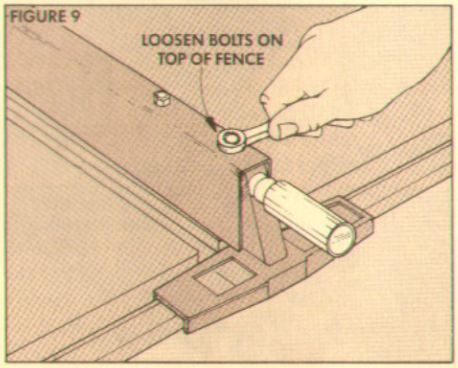

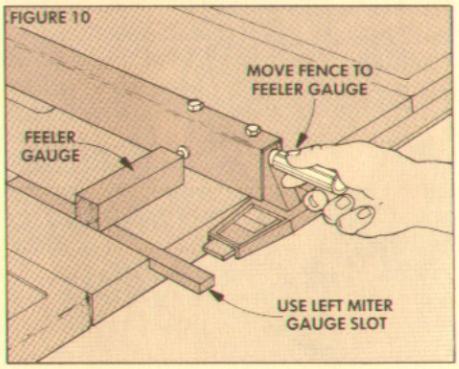

Radial Saw Adjustments

HOW TO ELIMINATE HEELING

Radial arm saws are prone to the same heeling problems that plague table saws. For clean cuts, the blade must be parallel to the kerf line. If it's not parallel, the sides of the teeth will rub on one side of the kerf as the cut is completed.

This problem is the same phenomenon as heeling on a table saw. But on a radial arm saw, the effect of heeling is more serious than rough, burned edges. Sometimes it's downright scary.

A heeling radial arm saw is threatening because of the friction created on the sides of the blade as it rubs against the edges of the workpiece. On a table saw this friction tends to bog down the motor. But, on a radial saw it makes the blade want to "grab" and race through the workpiece under its own power.

When it's racing straight at me, I get a little jumpy.

THE CURE

The cure for heeling on a radial arm saw is the same as on a table saw. The blade must be aligned so the front and rear of the blade are directly in line with the path the blade will follow. This can get a little confusing.

PATH. This path is determined by the saw's (radial) arm. The blade is attached to the motor, which is attached to the yoke, which is attached to the carriage that rolls on the arm. So the arm actually determines the path of the blade.

To prevent heeling, the blade must be exactly in line with the path the carriage takes as the whole assembly is pulled forward along the arm to make the cut.

But there's a problem aligning the blade on a radial arm saw. There's no parallel reference (like the miter gauge slot on a table saw) to line the blade up with.

BAD ADVICE. To compensate for the lack of a parallel reference, most manuals suggest first aligning the arm so it's 90° to the fence. Then, they say, adjust the heel of the blade using a framing square with the edge of one leg braced against the fence and the edge of the other tight against the side of the blade.

That's not the answer. In fact, following this procedure will probably make heeling worse. Using the square only sets the blade at 90° to the fence. If the arm isn't *exactly* perpendicular to the fence (which is almost impossible), alignment will be even farther off than the factory setting.

MAKE AN EDGE. Solving this problem requires a different approach. I create an edge that's parallel to the blade's path by placing a 12" by 12" piece of plywood against the fence and trimming off one edge, see Fig. 1. Then I use this edge as a reference line to align the saw blade in the radial arm saw just as I use the miter gauge slot to align the blade in a table saw.

Now, no matter where the plywood is located on the table, as long as the back edge is against the fence, the trimmed edge will be parallel with the blade.

ALIGNMENT GAUGE

To actually check for heeling, that is, to check the amount the yoke (and thus the motor and blade) is twisted on the carriage, I use a simple feeler gauge.

To make the gauge, fasten two scraps of wood together to form an L-shaped bracket. Then screw a round-head brass screw into the bracket so the screw is in line with the center of the blade (the arbor), see Fig. 2.

MARK TOOTH. To use the gauge to align the blade, first mark one tooth that will be used for all measurements. Then position the base of the L-bracket gauge against the edge of the plywood so the screw head almost touches this tooth. When it's in place, clamp the plywood to the saw's table, see Fig. 2.

LOCK CARRIAGE. For maximum stability when measuring from the edge of the plywood to the tooth, the gauge is moved instead of the carriage. To keep the carriage positioned, lock it about halfway out along the radial arm so the blade is positioned over the center of the table.

FINE TUNE. To align the blade, adjust the brass screw on the L-bracket until the marked tooth just brushes the screw at the front position. It should make a slight *ding* sound as the side of the tooth grazes the very end of the screw.

Then rotate the blade and slide the gauge back along the edge of the plywood to test the clearance at the back, see Fig. 3.

If the blade is out of alignment (if it's heeling), the clearance between the screw head and the marked tooth will be different at the rear position. To correct the angle, first loosen the adjustment bolts on top of the carriage according to the instructions that came with your radial arm saw.

When the bolts are loose, tap the front or back corner of the yoke to adjust the alignment angle of the blade. Keep testing front and back until the pitch of the *ding* sound is the same at the front and back when the tooth brushes the screw head.

After tightening the bolts, test the setting again (in case the yoke slipped as the bolts were tightened).

TEMPORARY SOLUTION

One thing to keep in mind is that this is a temporary solution. The procedure will cure heeling only when the saw is permanently set up for cross-cutting. If the yoke lever is loosened so the carriage can be rotated to orient the blade for ripping, returning to this *exact* setting is impossible. This means the process has to be repeated every time the yoke is loosened.

For this reason (not to mention the fact that I think ripping on a radial arm saw is dangerous), the radial arm saw in the *Woodsmith* shop is used only for cross-cutting.

FIGURE 1

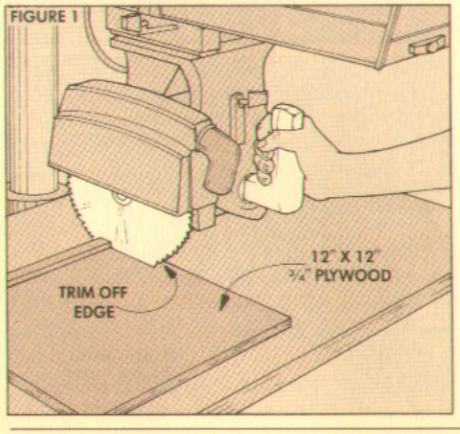

FIGURE 2

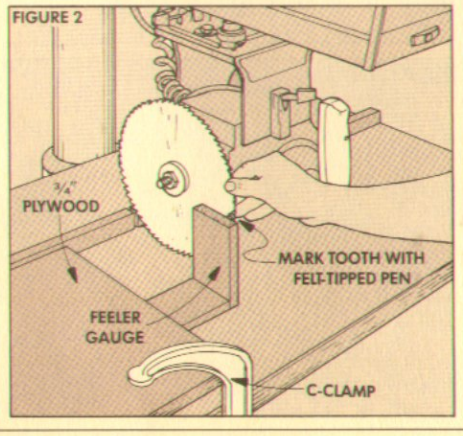

FIGURE 3

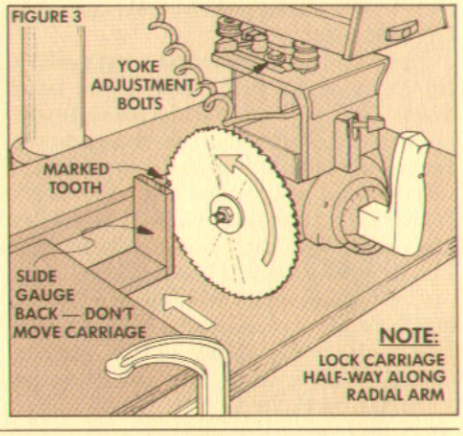

Talking Shop

AN OPEN FORUM FOR COMMENTS AND QUESTIONS

ATTENTION WORKBENCH BUILDERS

Oops. We made a mistake on a measurement in the workbench project that appeared in the last issue of *Woodsmith* (No. 50).

On page 12, Figure 2, the measurement between the two notches on the middle board of the foot should be 15″ (not 16″).

Also, the text that relates to that drawing (it's the last sentence of text on the first column of that page) should read: "Then lay out a second 2″-wide notch 15″ from the first."

WHAT TYPE OF WOOD?

In addition to the phone call from a reader in Michigan who let us know about that mistake, we've received quite a number of calls and letters about the bench. The question most often asked is what kind of wood we used to build the bench.

We built our bench and base out of hard maple, and the cabinet out of maple plywood. Hard maple is variously referred to as Northern maple, rock maple, hard rock maple, sugar maple, or by its Latin name, Acer saccharum.

This choice may come as a suprise to those who read in all the catalogs about the fine European benches being built out of beech. But there's nothing particularly unique about European red beech. It's just that it's available and relatively cheap in Europe. It sounds more exotic than it is.

On the other hand, maple is a fairly common American wood, but doesn't get the respect it deserves.

BEECH. Beech has a grain pattern that's tight, even, and straight. On quartered surfaces it has obvious brown flecks due to the medium-sized rays. It's commonly used for toy parts, tool handles, drawer runners, kitchen utensils, and also makes a floor that will take a lot of wear.

One of the problems we've run into with American beech is that it moves and warps considerably with changes in humidity. The other problem is that it's not readily available in many parts of the United States.

MAPLE. Hard maple is somewhat heavier and more dimensionally stable than beech. It has the fine tight grain of beech and is even a little higher in compression strength than white oak. (That's why it's used for bowling alleys and gym floors.) It's the perfect wood for the bench (even though it doesn't come from Europe.)

OAK. Another choice could be oak. Oak (both red and white) is a little heavier than beech and would add more mass to the bench. The drawback is the open grain. The surface wouldn't be as smooth and dirt would fill into the open grain pores.

CARPET TAPE PROBLEMS

I use double-sided carpet tape for lots of temporary "holding" jobs around the shop. One problem I ran into when making the band saw boxes in this issue was that the carpet tape worked "too good."

After I stuck the different lid pieces together, and made the band saw cuts, I couldn't pull them apart. I didn't want to drive a chisel between the two pieces — it's too easy to gouge or dent the edges of the wood.

A COUPLE SOLUTIONS. To pull the pieces apart, try grabbing one in each hand and *twist* the pieces. Sometimes that's all that's necessary.

If they still won't come apart, try flowing lacquer thinner or nail polish remover (acetone) down into the joint. The solvent will dissolve the adhesive on the tape and the pieces come right apart.

FINISHING PROBLEMS. There's another minor problem with using carpet tape. It can leave an adhesive residue on the surface of the wood or down into the pores. When this happens (and you can't always see it), it will seal the wood so finish won't stick to it.

To prevent this, before applying any stain or finish, I wipe lacquer thinner over any surfaces that have been taped together. The lacquer thinner won't damage the wood or raise the grain and dries in a matter of minutes.

BIMETAL BLADES

In working on the article about band saws for this issue, some questions came up about bimetal blades. Aren't they the equivalent of carbide-tipped saw blades? Can't you put an incredible amount of tension on them?

Bimetal blades have a heat-resisting cobalt steel strip welded onto the front of the blade. The teeth are cut into this strip. They were originally designed for metal cutting, but are being tried by more and more woodworkers since high tension (25,000 psi on a ¼″ blade) can be applied to the blade.

I have two concerns about bimetal blades. First, if you need to apply that much tension to get a good cut on a woodcutting band saw, something may be wrong with your saw setup or the blades you are using aren't sharp. (Note: I've also heard of arbors breaking from putting too much tension on a band saw blade.)

The second concern I have about bimetal blades has to do with the speed the band saw runs. (Band saws are measured in feet per minute that the blade moves.)

"Bimetal blades are made for maximum tooth life when cutting metal," explains Jack Dowding, Manager of Technology for American Saw and Manufacturing Company, makers of Lenox blades. "On most metal-cutting applications, the blade isn't run much over 400 feet per minute. We don't recommend running a bimetal blade over 700 feet per minute."

Most woodcutting band saws run more than three times that fast. The Sears 12″ band saw, for example, runs at 2700 feet per minute with the pulleys that come on the machine. I asked Jack what might happen if a bimetal blade were run that fast.

"Bimetal blades do not have what we call 'fatigue resistance.' Metal cutting speeds are low and so the number of times the blade goes around the wheel is also low.

"Each time it revolves around the wheels, the blade bends. It's like taking a paper clip and bending it back and forth — sooner or later it breaks. If the blade is running at a fast speed and breaks, people could get hurt."

OTHER CHOICES. Instead of bimetal blades, in the *Woodsmith* shop we like to use the ones made specifically for cutting wood. Our favorites are the blades made by the American Saw Company which makes a variety of Lenox brand blades including flexback and hardback carbon.

Both of these blades are made from the same steel and can be used for all woodworking applications. The difference between the flexback and hardback carbon blades is subtle. (Lenox calls their hardback carbon blade a "NEO" blade.)

The "NEO" blade is a little more expensive since it has some extra operations that make it harder on the back. The extra hardness gives it more strength allowing it to take contour cuts better than the flexback.

Most Lenox blades are sold through local distributors. To find the name of your nearest Lenox distributor call American Saw and Manufacturing Company at 800-628-3030.

Lenox blades are also sold mail order from:

VIKING MACHINERY AND TOOL SUPPLY, 2915 Newpark Drive, Barberton, OH 44203; 800-223-3487. Typical prices for an 80″ blade (to fit a Sears 12″ band saw) run from $8.00 to $9.10 for flexback and hardback carbon blades and $21.50 for bimetal blades.

Sources

CLASSIC ROADSTER PATTERN

A pattern that includes full-size profiles of the car body and fenders is available free of charge. Send for *Woodsmith* Pattern CAR51. Send name and address to:

WOODSMITH PATTERN, Dept. CAR51, P.O. Box 10350, Des Moines, IA 50306.

ROADSTER PARTS

You can order the parts for the classic roadster from the following sources:

TURNING SQUARES. To make the body of the roadster, you need a block that's at least 2" x 3" - 12". You could just glue up some stock to form this block. But we found that using a turning square works better since it's usually high quality kiln-dried stock and there won't be any joint lines showing in the finished project.

The fenders and axle blocks are cut from a block 1¾" x 4" - 12". (This could be cut out of standard 8/4 stock.)

Some mail order sources for turning squares in the sizes needed include:

ALBERT CONSTANTINE AND SON, INC., 2050 Eastchester Road, Bronx, NY 10461-2297; 800-223-8087 (Catalog: $1.00). Cherry, mahogany, maple, poplar, red oak, and walnut. 12", 18", 24", and 36" lengths. Priced per linear foot.

BOB MORGAN WOODWORKING SUPPLIES, 1123 Bardstown Road, Louisville, KY 40204; 502-456-2545 (Catalog: $1.00). Maple, cherry, and walnut. 8", 16", and 32" lengths.

THE WOODWORKERS' STORE, 21801 Industrial Boulevard, Rogers, MN 55374; 612-428-2199 (Catalog: $2.00). Maple, walnut. Priced per linear inch.

CRYDER CREEK WOOD SHOPPE, INC. 101 Commercial Ave., Whitesville, NY 14897; 800-642-9663 (Catalog: $1.00). Maple, cherry, ash, and basswood. 8", 12", 16", 20", and 24" lengths.

WHEELS. Within the past couple years, just about every mail order woodworking source has started stocking the spoked toy wheels we used on the car. To make the car you will need five wheels. (Don't be caught without a spare!) They measure 2" in diameter, ⅝" wide, and come with matching 3/16"-dia. axle pins.

Before ordering, you may want to obtain a catalog to find out about prices, minimum orders, and shipping charges.

The following sources will sell spoked wheels by the individual wheel:

CHERRY TREE TOYS, INC. P.O. Box 369, Belmont, OH 43718; 614-484-4363.

WOODWORKER'S SUPPLY OF NEW MEXICO, 5604 Alameda Pl. NE, Albuquerque, NM 87113; 800-645-9292.

BOB MORGAN WOODWORKING SUPPLIES (see address above).

The following sources sell spoked wheels in sets of four, eight, or ten:

ALBERT CONSTANTINE AND SONS (see address above).

GENEVA WOODWORKS, 1502 N. Elkhorn Road, Lake Geneva, WI 53147; 800-556-2548.

TRENDLINES, 375 Beacham St., Chelsea, MA 02150; 800-343-3248.

WOODCRAFT SUPPLY CORP., 41 Atlantic Ave., Box 4000, Woburn, MA 01888; 800-225-1153.

THE WOODWORKERS' STORE (see address above).

SPRINGS. Most hardware stores have a wide variety of small compression springs. Our experience has been that you have to ask at the service desk to see them since they may not be out on display. For the suspension system on the car we bought two 3/16"-outside diameter, 1¾"-long compression springs. We then cut each in half to make four ⅞"-long springs.

WINDSCREEN. The piece of plastic needed for the windscreen is very small (1" x 2½"). With a little scrounging, you might be able to find some plastic packaging that you could use. (Sometimes nails or screws are sold in small plastic boxes.) If not, you can buy ⅛" Plexiglas from most glass shops and hardware stores. Our local glass shop is currently charging $3.50 per square foot. At the hardware store the smallest piece I could find was 18" x 24" and it cost $5.79. (You can always find uses for the left over Plexiglas "scrap.")

CLASSIC ROADSTER KIT

Whenever we show a project in *Woodsmith*, we try to design it so you can get all the parts through mail order sources. Sometimes that's not as easy as we'd like it to be.

The biggest problems are with small projects. Most mail order catalogs request a minimum order (of $10 to $15) plus a postage and handling charge. When you need to order just a few items for a project, you can run into "minimum order" problems.

The roadster in this issue is an example of the difficulties of getting all the parts needed through the mail. Where can you buy *five* spoked wheels, two small springs for the suspension system, and a little piece of plastic for the windscreen without getting involved in minimum orders?

With that in mind, we decided to put together a package with these parts for sale to our readers. We're not trying to compete with the mail order companies. In fact, if you plan to build a number of cars, you can get better pricing for larger quantities than with our kit. But for just one or two cars, this kit may work out best.

TWO KITS. We're actually offering two kits: one with parts only, and one with parts and wood. (Both kits include the free pattern for the body and fenders.)

KIT A, PARTS ONLY. This kit includes all the basic parts needed for the roadster:

(5) spoked wheels (2" dia., ⅝" wide).

(5) 3/16"-dia. axle pins.

(2) 1¾" compression springs (that are cut in half for the four springs needed).

(4) No. 6 x 1½" Fh. woodscrews.

(1) piece of ⅛" Plexiglas for the windscreen (1½" x 3").

The total price (postage and handling are free) for Kit A is $5.95.

KIT B, PARTS AND WOOD. This kit includes the parts package (Kit A) *plus* all the wood and dowels needed to make the roadster. (Note: The wood is *not* cut to final shape. It's just blocks you have to cut.) We made our classic roadster out of cherry and walnut, so those are the woods we're offering in the kit.

(1) block of cherry (2" x 3" - 12") for the body.

(2) blocks of cherry (1½" x 2" - 12") for the fenders and axle blocks.

(1) block of walnut (¾" x 4" - 6") for the seats, radiator, foot pads, dashboard, windscreen struts, tool box, and bumpers.

Also included in this package are short lengths of dowels needed to make the headlamps, steering wheel, steering wheel column, bumper guards, radiator cap, and the pieces needed to attach the bumpers and headlamps to the roadster.

The total price (postage and handling are free) for Kit B is $16.95.

To order these kits, use the order form on page 2 of the Protective Cover. (Feel free to photocopy this form if you don't want to cut it out.)

If this form is missing, just write your order on a piece of paper and send it to us with your payment. (Include which kit you want and your name and address.)

Send your order and payment (no charge cards or phone orders, please) to: *Woodsmith* Car Kit, P.O. Box 10350, Des Moines, IA 50306. Please allow 4 to 6 weeks for delivery.

(Note: For fastest service, please use the address with P.O. Box 10350, as listed above. Don't use the envelope enclosed in this issue or the street address.)